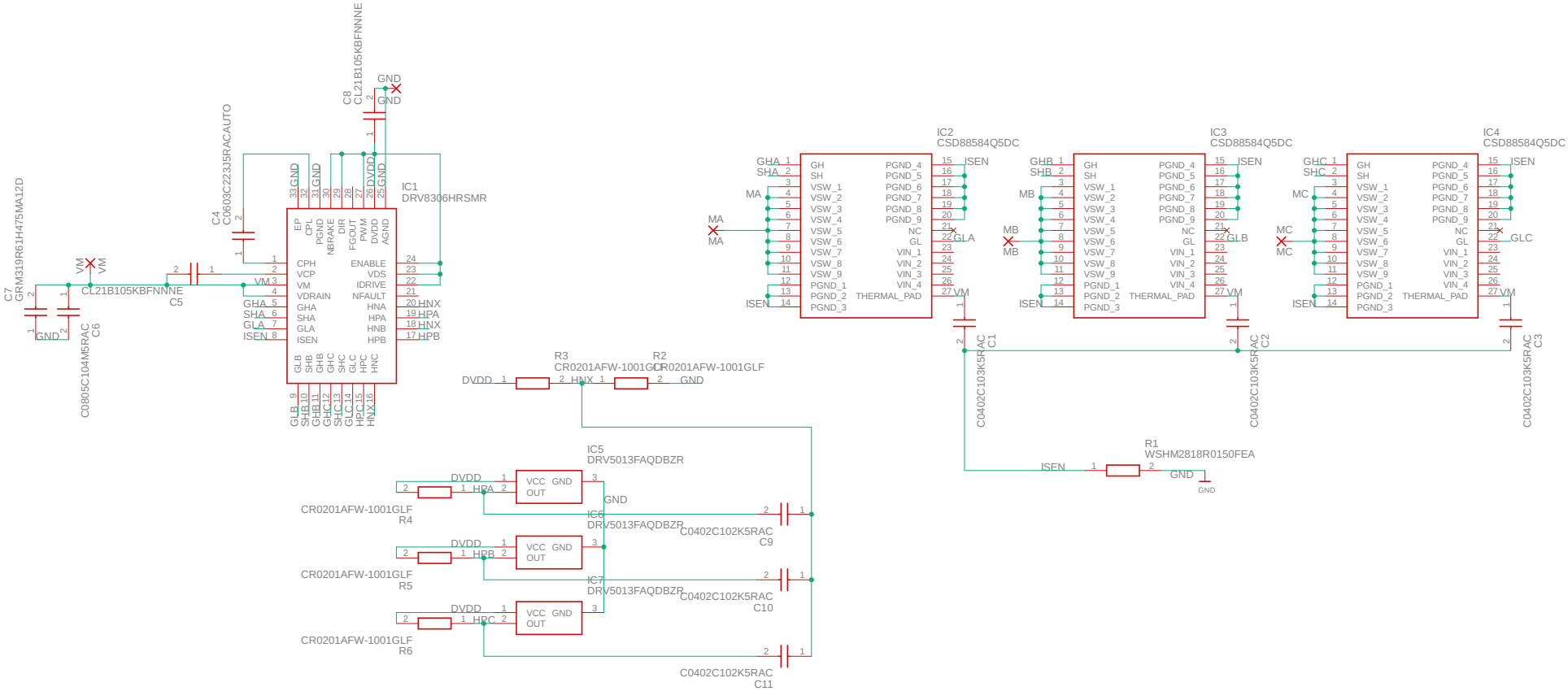
IC1
DRV8306HRSMR
IC2
CSD88584Q5DC
IC3
CSD88584Q5DC
IC4
CSD88584Q5DC
IC5
DRV5013FAQDBZR
IC6
DRV5013FAQDBZR
IC7
DRV5013FAQDBZR
C8
CL21B105KBFNNNE
C4
C0603C223J5RACAUTO
C7
GRM319R61H475MA12D
C5
CL21B105KBFNNNE
C6
C0805C104M5RAC
C1
C0402C103K5RAC
C2
C0402C103K5RAC
C3
C0402C103K5RAC
C9
C0402C102K5RAC
C10
C0402C102K5RAC
C11
C0402C102K5RAC
R1
WSHM2818R0150FEA
R2
CR0201AFW-1001GLF
R3
CR0201AFW-1001GLF
R4
CR0201AFW-1001GLF
R5
CR0201AFW-1001GLF
R6
CR0201AFW-1001GLF
GND
VM
DVDD
ISEN
MA
MB
MC
GHA
SHA
GLA
GLB
GLC
HNX
HPA
HPB
HPC
HNC