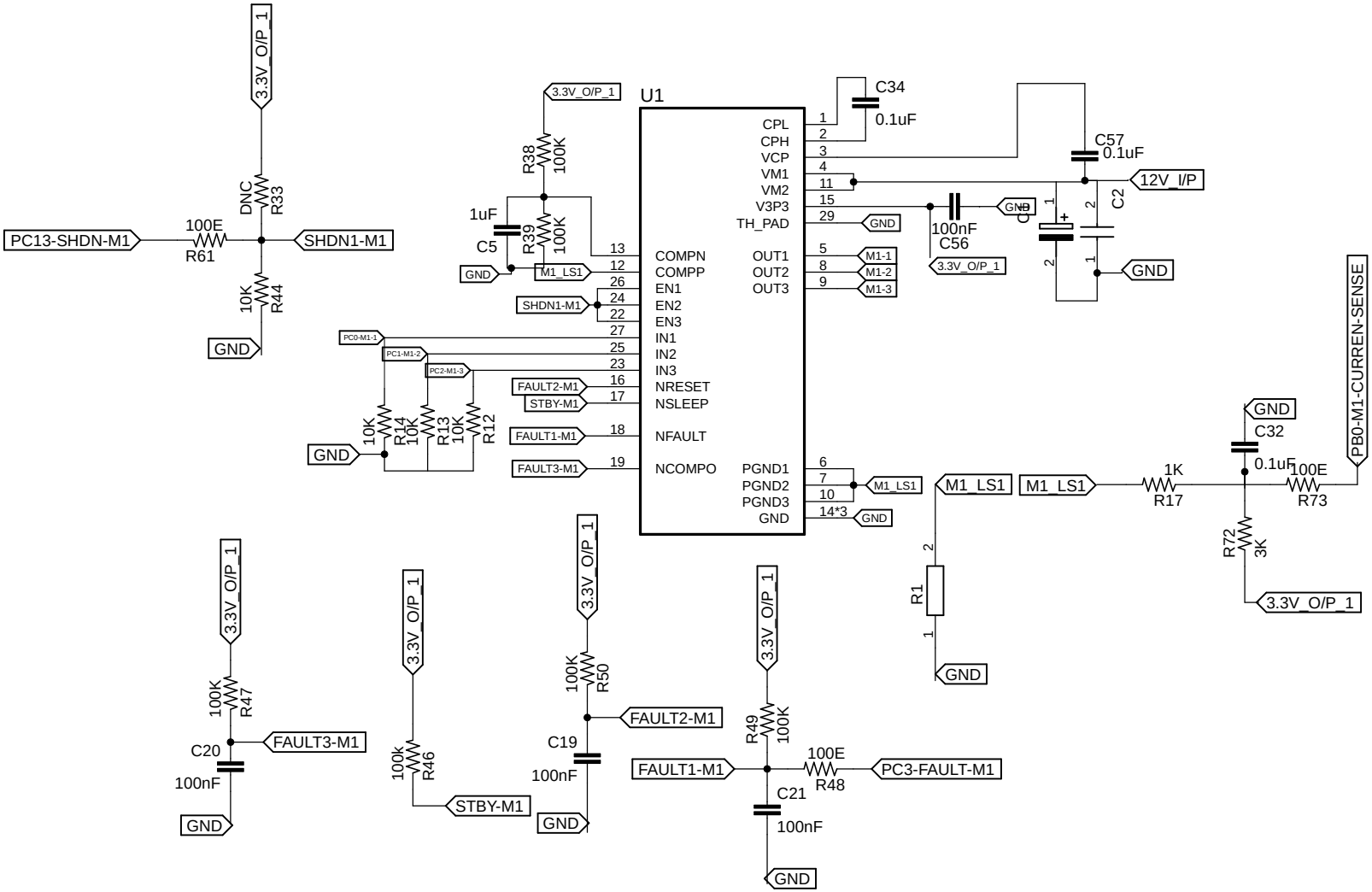
U1
CPL
CPH
VCP
VM1
VM2
V3P3
TH_PAD
COMPN
COMPP
EN1
EN2
EN3
IN1
IN2
IN3
NRESET
NSLEEP
NFAULT
NCOMPO
OUT1
OUT2
OUT3
PGND1
PGND2
PGND3
GND
14*3
3.3V_O/P_1
12V_I/P
C34
0.1uF
C57
0.1uF
C2
100nF
C56
C1
M1-1
M1-2
M1-3
M1_LS1
SHDN1-M1
PC0-M1-1
PC1-M1-2
PC2-M1-3
FAULT2-M1
STBY-M1
FAULT1-M1
FAULT3-M1
R38
100K
1uF
C5
R39
100K
PC13-SHDN-M1
100E
R61
DNC
R33
10K
R44
10K
R14
10K
R13
10K
R12
R1
1K
R17
C32
0.1uF
100E
R73
R72
3K
PB0-M1-CURREN-SENSE
100K
R47
C20
100nF
100k
R46
STBY-M1
100K
R50
C19
100nF
R49
100K
100E
R48
C21
100nF
PC3-FAULT-M1