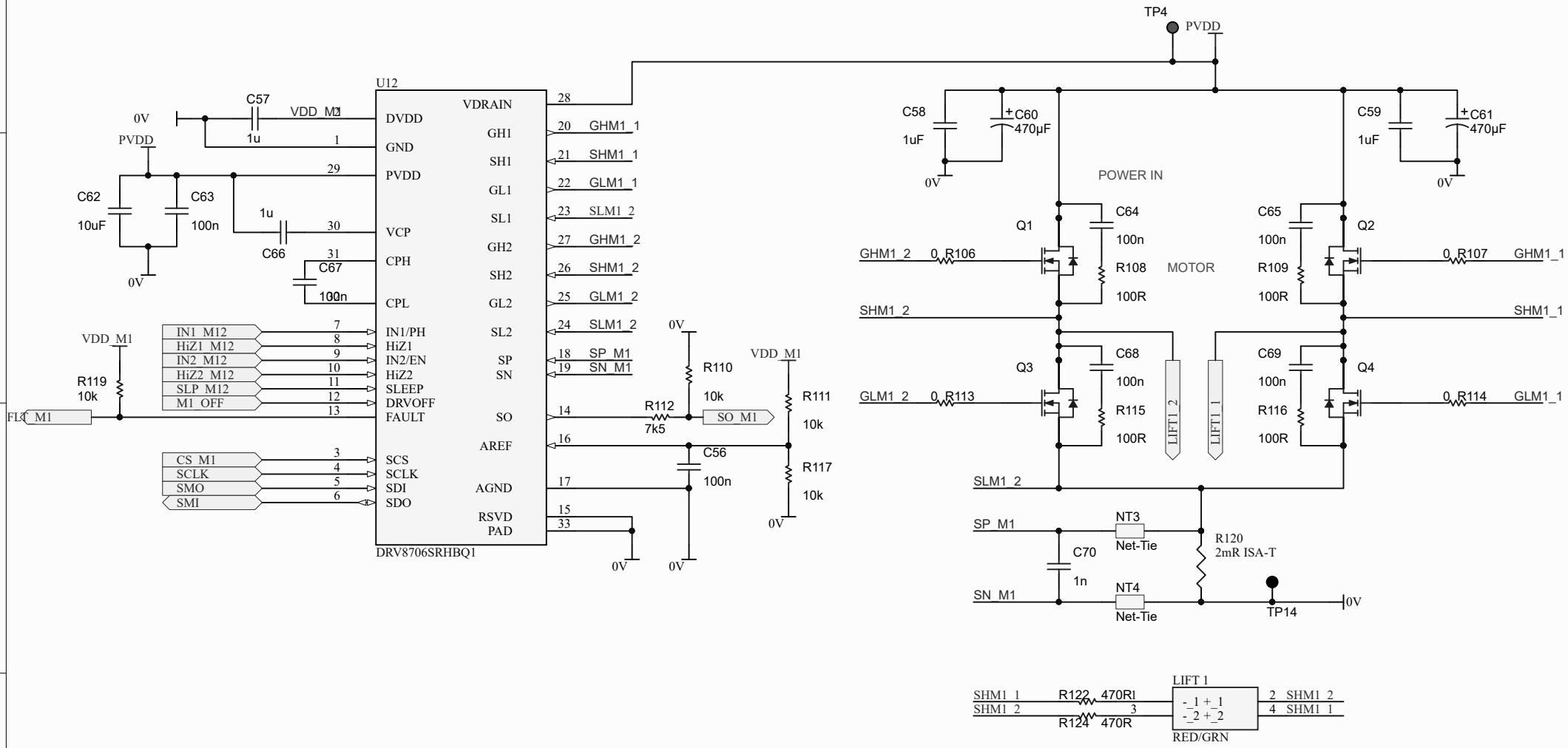

Title *GLACS MC - M1 Drive*			*Muirlenium Technology (Pty) Ltd* *13 Rocklands Close* *Murdoch Valley* *Simonstown, Western Cape* *South Africa, 7975*
Size: A4	Number: MT20013	Revision: A	
Date: 2021/11/16 Time: 10:29:04 AM		Sheet 8 of 13	
File: F:\Dropbox\Projects\DCD\GPRLiftingArrangement\15. Drawings\3. PCB\MT20013\RevC\MotorDRV 1.SchDoc			