Cooling Fan

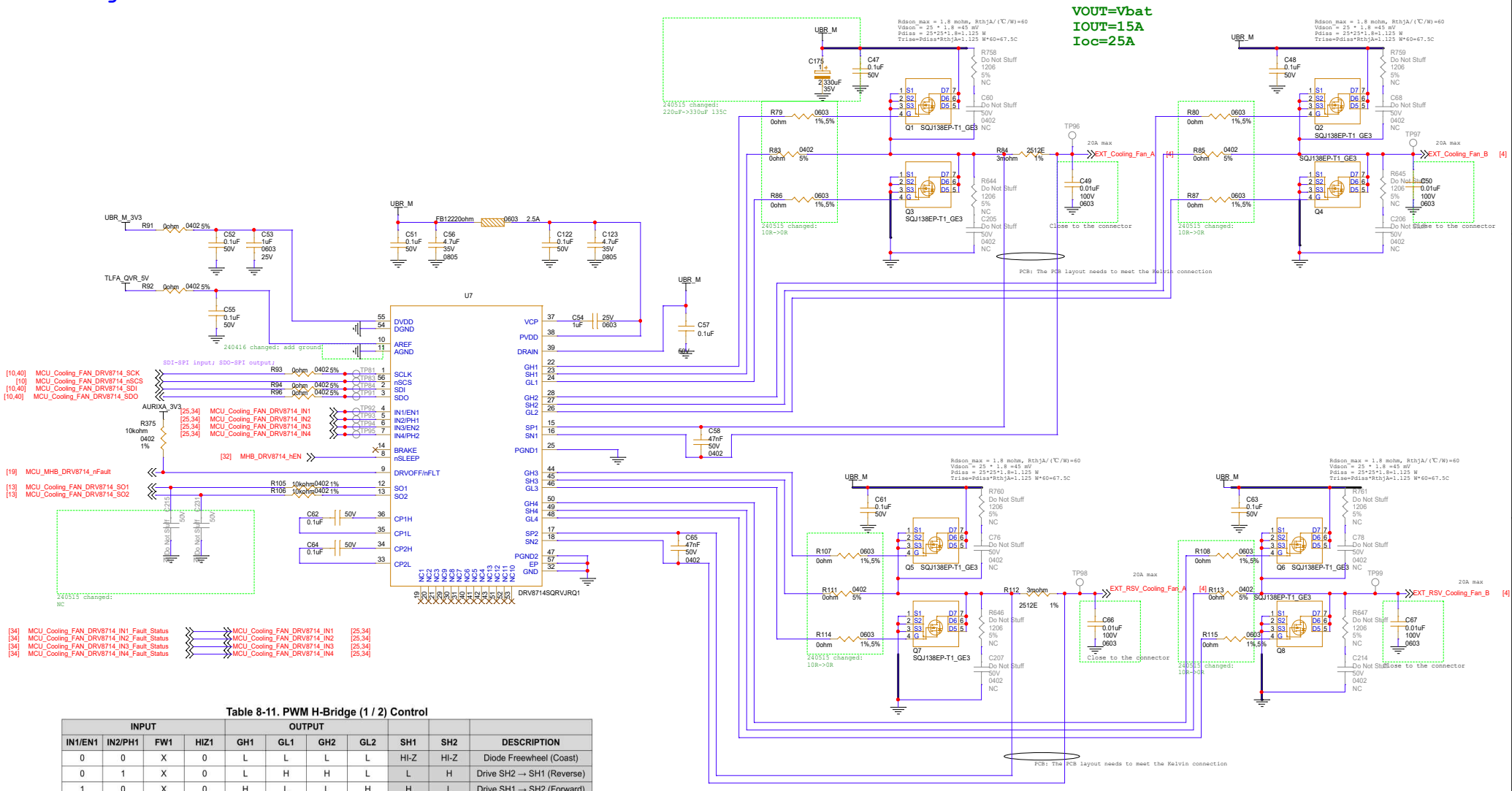

Table 8-11. PWM H-Bridge (1 / 2) Control

INPUT				OUTPUT						
IN1/EN1	IN2/PH1	FW1	HIZ1	GH1	GL1	GH2	GL2	SH1	SH2	DESCRIPTION
0	0	X	0	L	L	L	L	HI-Z	HI-Z	Diode Freewheel (Coast)
0	1	X	0	L	H	H	L	L	H	Drive SH2 → SH1 (Reverse)
1	0	X	0	H	L	L	H	H	L	Drive SH1 → SH2 (Forward)
1	1	0b	0	L	H	L	H	L	L	Low-Side Active Freewheel
1	1	1b	0	H	L	H	L	H	H	High-Side Active Freewheel
X	X	X	1	L	L	L	L	HI-Z	HI-Z	High-Impedance

Table 8-12. PWM H-Bridge (3 / 4) Control

INPUT				OUTPUT						
IN3/EN2	IN4/PH2	FW2	HIZ2	GH3	GL3	GH4	GL4	SH3	SH4	DESCRIPTION
0	0	X	0	L	L	L	L	HI-Z	HI-Z	Diode Freewheel (Coast)
0	1	X	0	L	H	H	L	L	H	Drive SH4 → SH3 (Reverse)
1	0	X	0	H	L	L	H	H	L	Drive SH3 → SH4 (Forward)
1	1	0b	0	L	H	L	H	L	L	Low-Side Active Freewheel
1	1	1b	0	H	L	H	L	H	H	High-Side Active Freewheel
X	X	X	1	L	L	L	L	HI-Z	HI-Z	High-Impedance

PSU_A02

Title	PSU_A_Sample	
Size C	Document Number 016_Main_Cooling_System_Fan	Rev A01
Date: Friday, May 17, 2024	Sheet 25 of 43	