ECR :

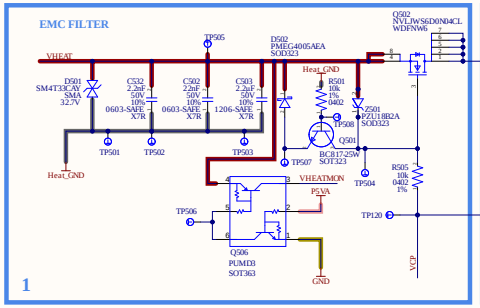

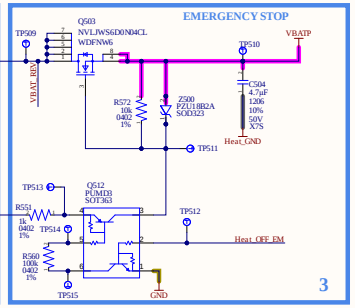

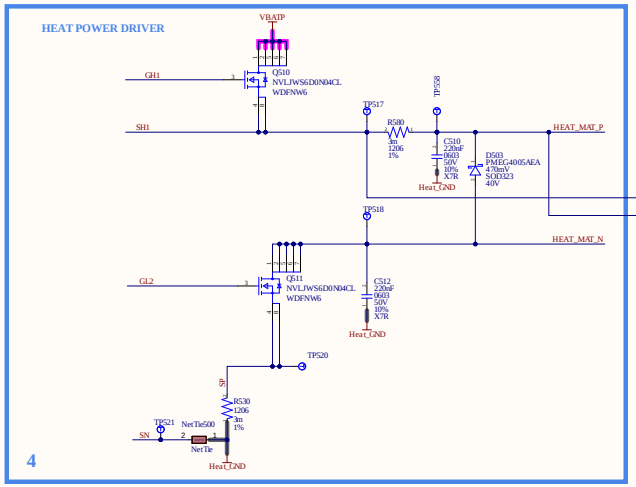

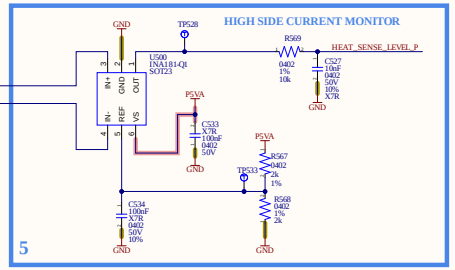

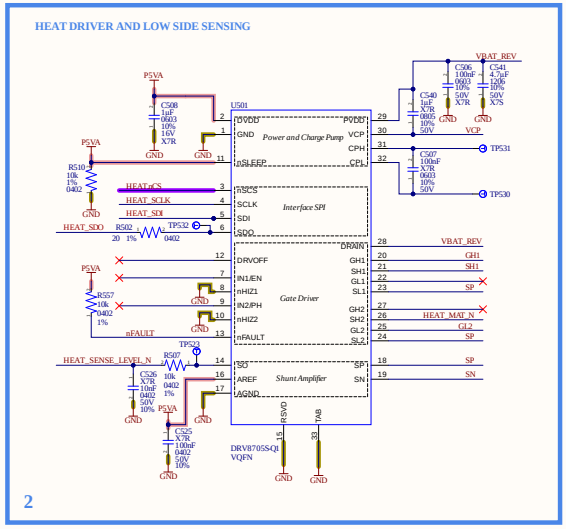

VHEAT	VHEAT
HEAT_NTCBIAS	HEAT_NTCBIAS
HEAT_SDO	HEAT_SDO
HEAT_SDI	HEAT_SDI
Heat_OFF_EM	Heat_OFF_EM
LIMP	LIMP
HEAT_SW	HEAT_SW
HEAT_LED_uC	HEAT_LED_uC
HEAT_SCLK	HEAT_SCLK
HEATnCS	HEATnCS

HEAT_LED	HEAT_LED
VHEATMON	VHEATMON
HEAT_MAT_P	HEAT_MAT_P
HEAT_MAT_N	HEAT_MAT_N
HEAT_TCH	HEAT_TCH
HEAT_TCL	HEAT_TCL
HEAT_SW_uC	HEAT_SW_uC
HEAT_NTC_N	HEAT_NTC_N
HEAT_NTC_P	HEAT_NTC_P
nFAULT	nFAULT
HEAT_SENSE_LEVEL_N	HEAT_SENSE_LEVEL_N
HEAT_SENSE_LEVEL_P	HEAT_SENSE_LEVEL_P

Autoliv SITE RBE

AUTOLIV INC.
PROPRIETARY & CONFIDENTIAL

This document and the data disclosed herein or herewith is proprietary and shall not be reproduced, used, or disclosed in whole or part without written permission from Autoliv Inc

PRODUCT	DATE
666745700E	4/24/2025

CIRCUIT	SIZE
HEAT	A2

ENGINEER	ECAD_DESIGNER	DRAWING NO.	REV	SHEET
Florin Oprea	Florin Oprea	[No Variations]	*	5 OF 6