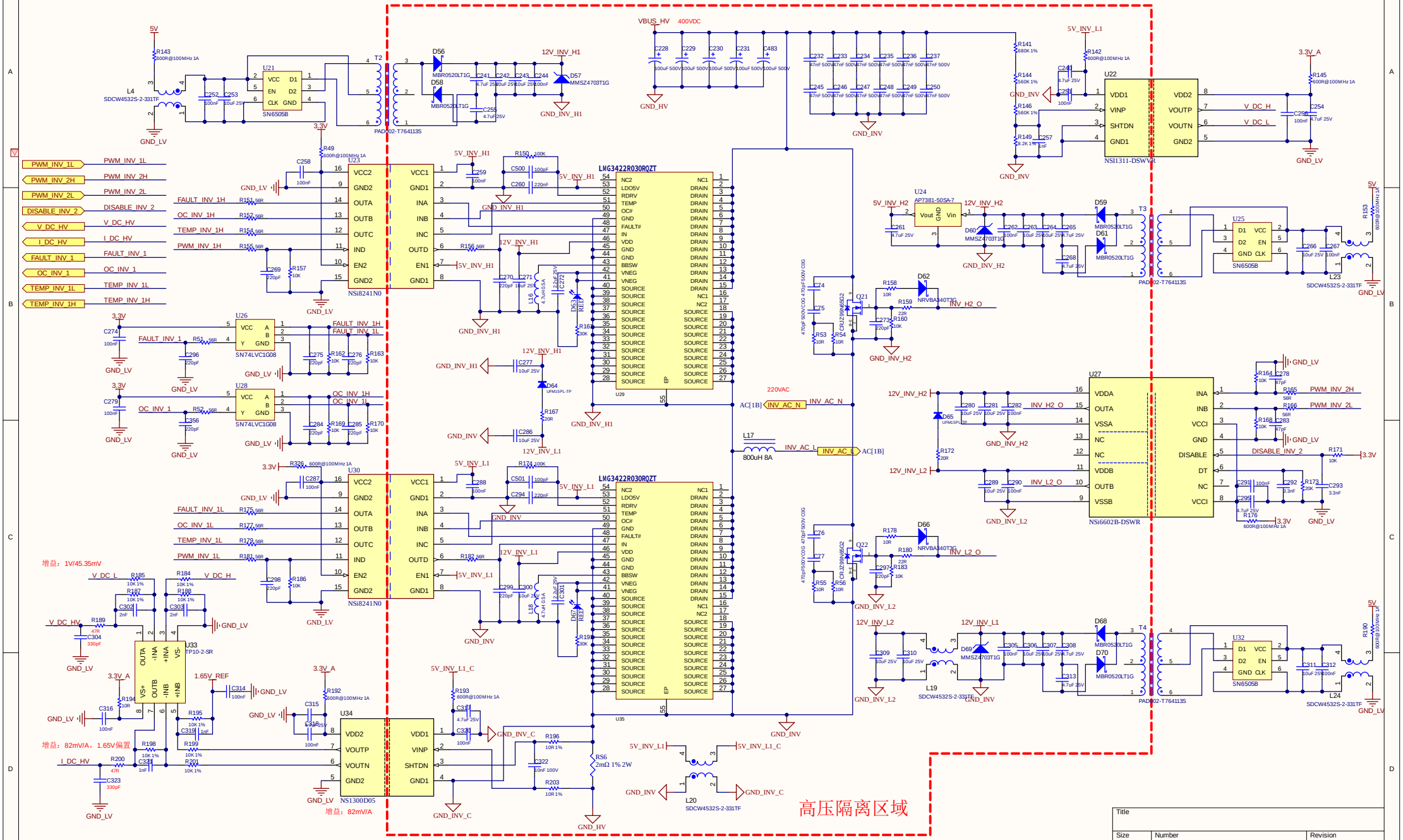

Title		
Size A2	Number	Revision
Date: 10/11/2024	Sheet of	
File: E:\7-光伏储能\..\Inverter.SchDoc	Drawn By:	