Solenoid details : L=5mH, R=58.3E

PULL IN CURRENT: 145mA

HOLD IN CURRENT: 91mA
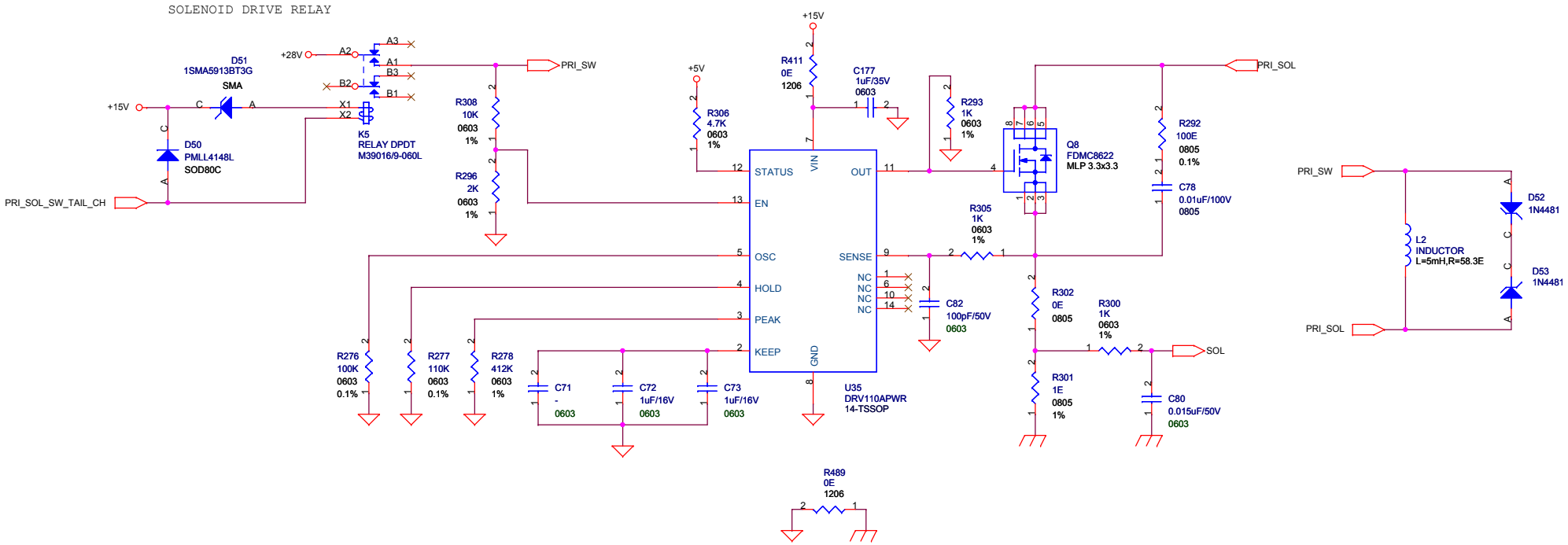
PULL IN TIME: 100msec to 200msec