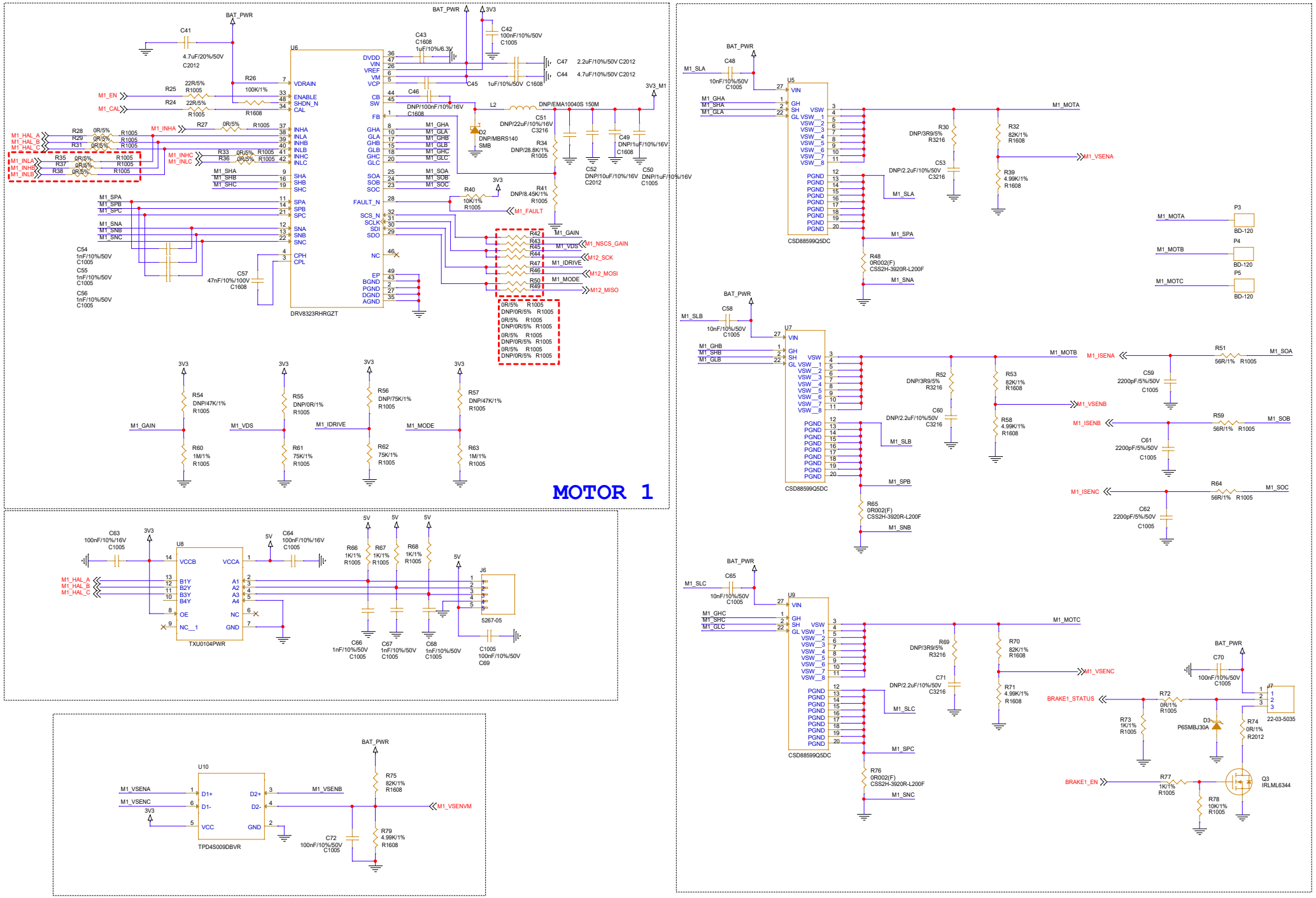

Title	<Title>	
Size C	Document Number <Doc>	Rev 1.0
Date: Monday, February 23, 2025	Sheet 5 of 8	

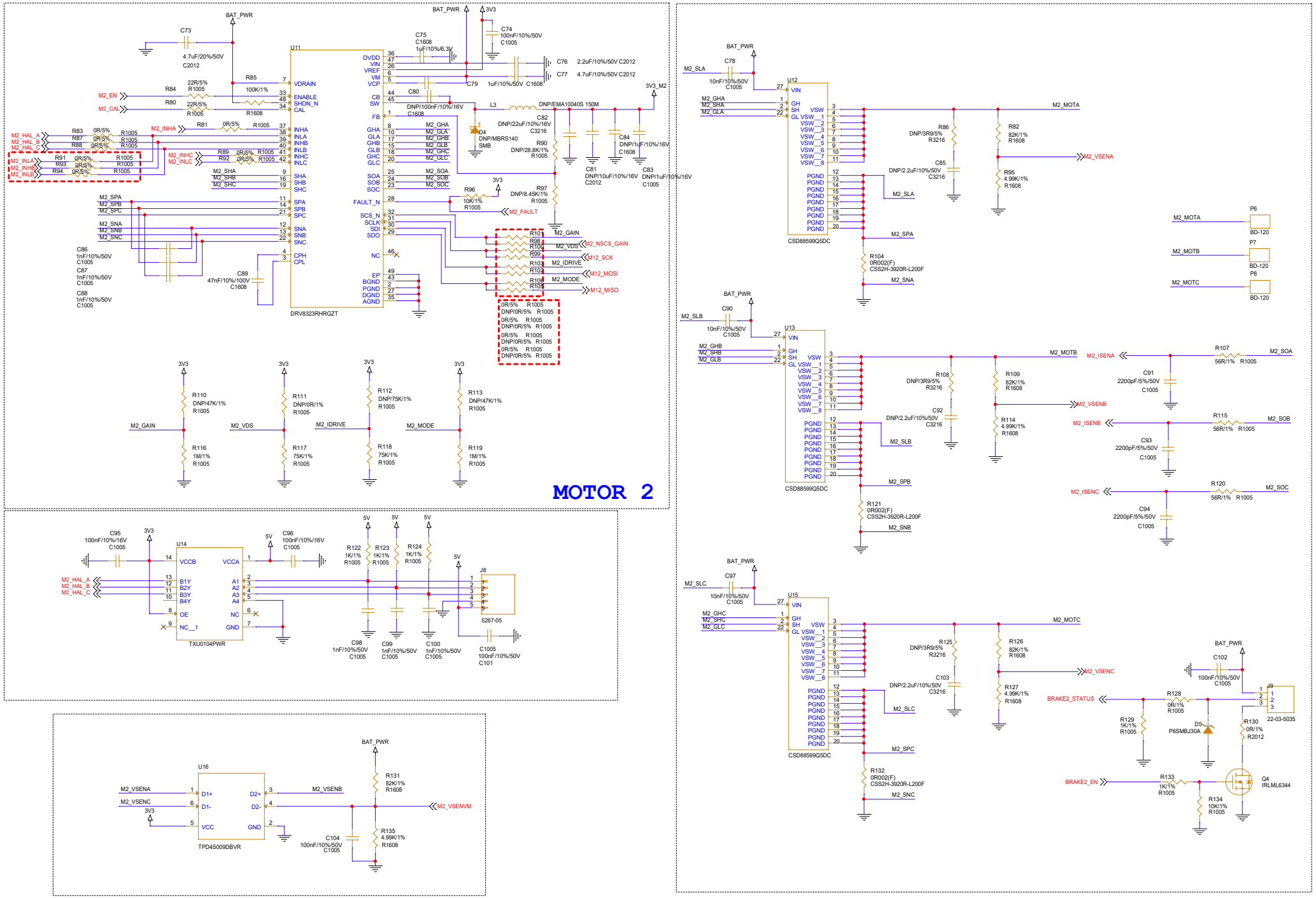

Title	<Title>	
Size C	Document Number <Doc>	Rev 1.0
Date: Monday, February 23, 2025	Sheet 6 of 8	