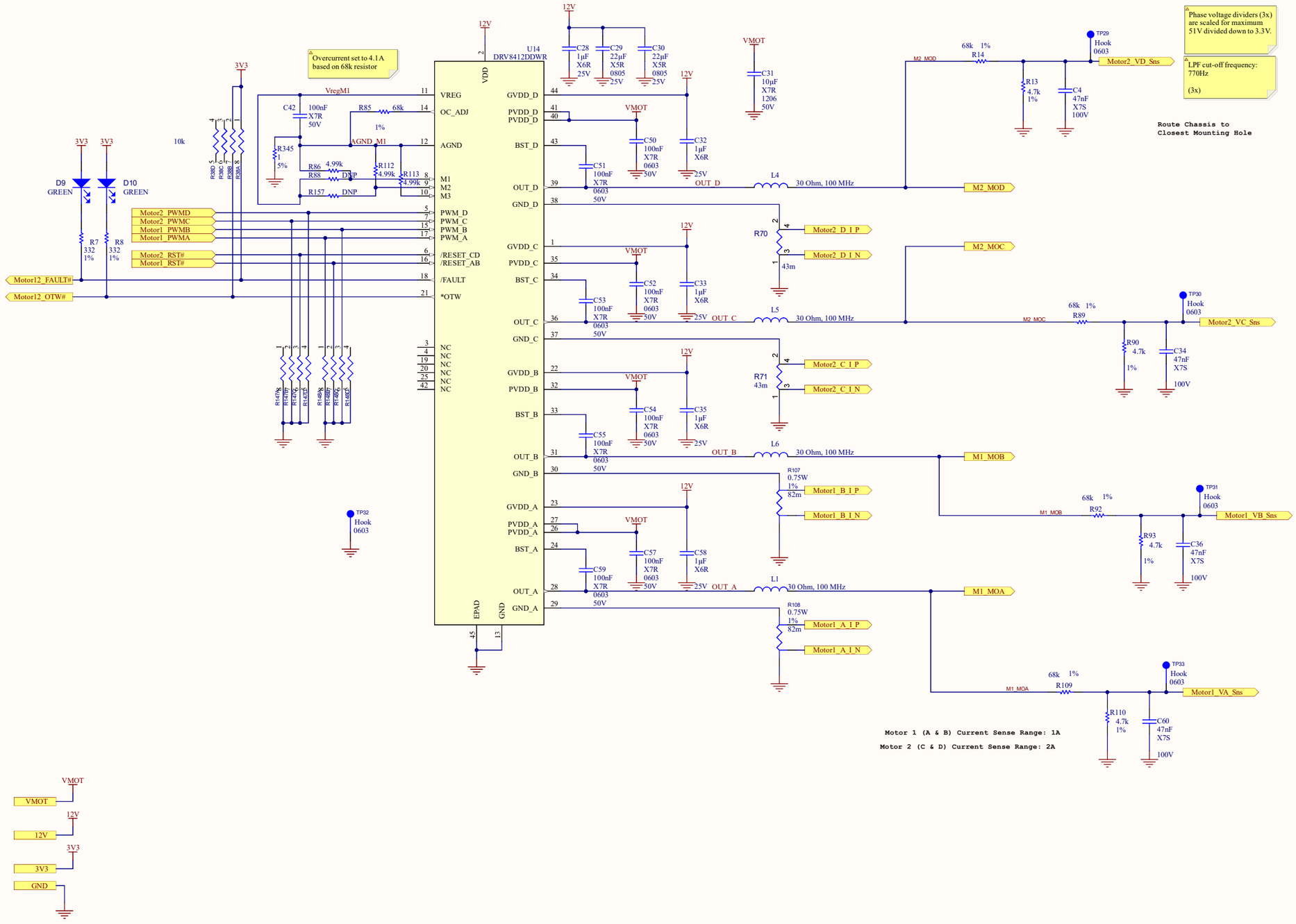

Title	*Drive Control PCB*		309 Waverly Oaks Rd. Suite 105 Waltham, MA 02452
Size: C	Number:	Revision: B	
Date: 8/17/2023	Time: 4:27:34 PM	Sheet 6 of 9	
File: Motor Driver.SchDoc			