H-Bridge Driver 两通阀

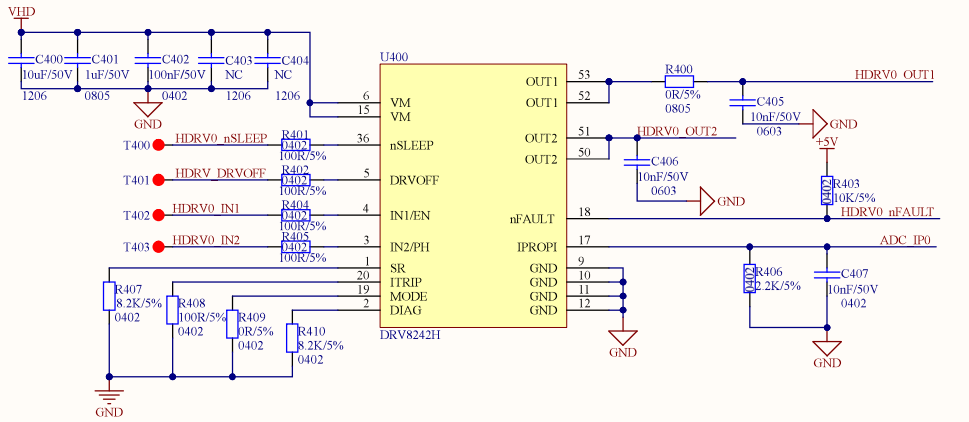

I(TRIP)=1A

H-Bridge Driver 三通阀

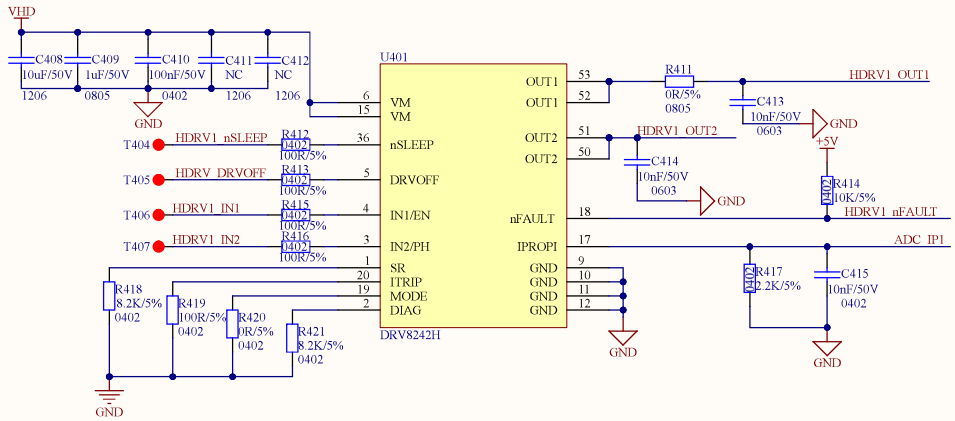

I(TRIP)=1A

H-Bridge Driver 九通阀

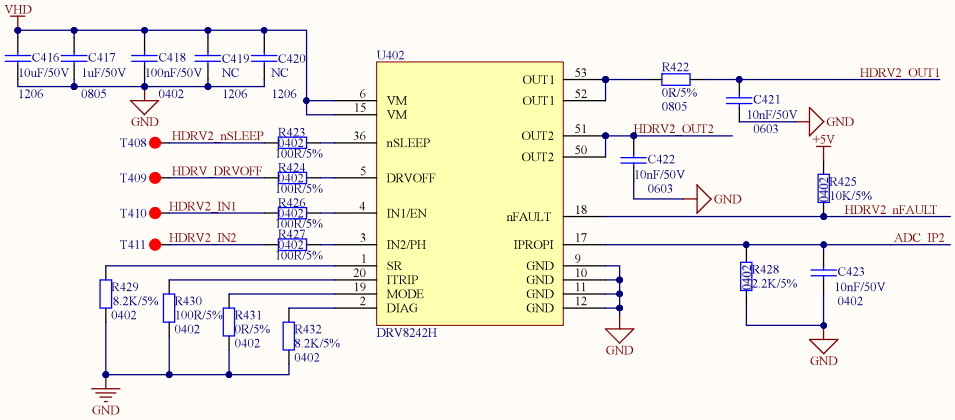

I(TRIP)=1.58A

Title		
Size A3	Number	Revision
Date: 7/10/2025	Sheet of	
File: E:\ygao\..\04_H_DRV.Sch	Drawn By:	