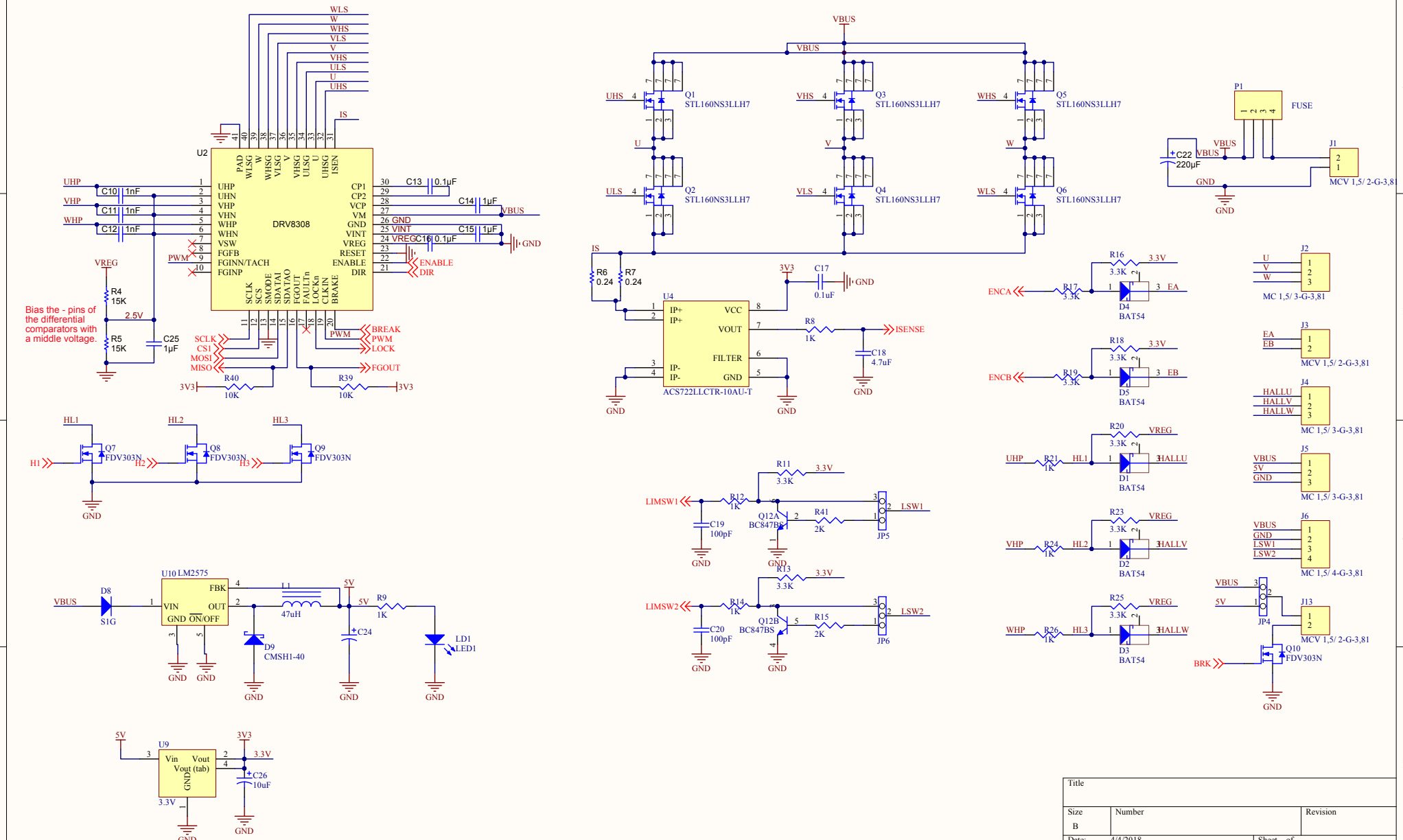

Title		
Size B	Number	Revision
Date: 4/4/2018	Sheet of	
File: F:\MotorControlSolution\..\POWER.SchDoc	Drawn By:	