CUVETTE STEPPER MOTOR DRIVER

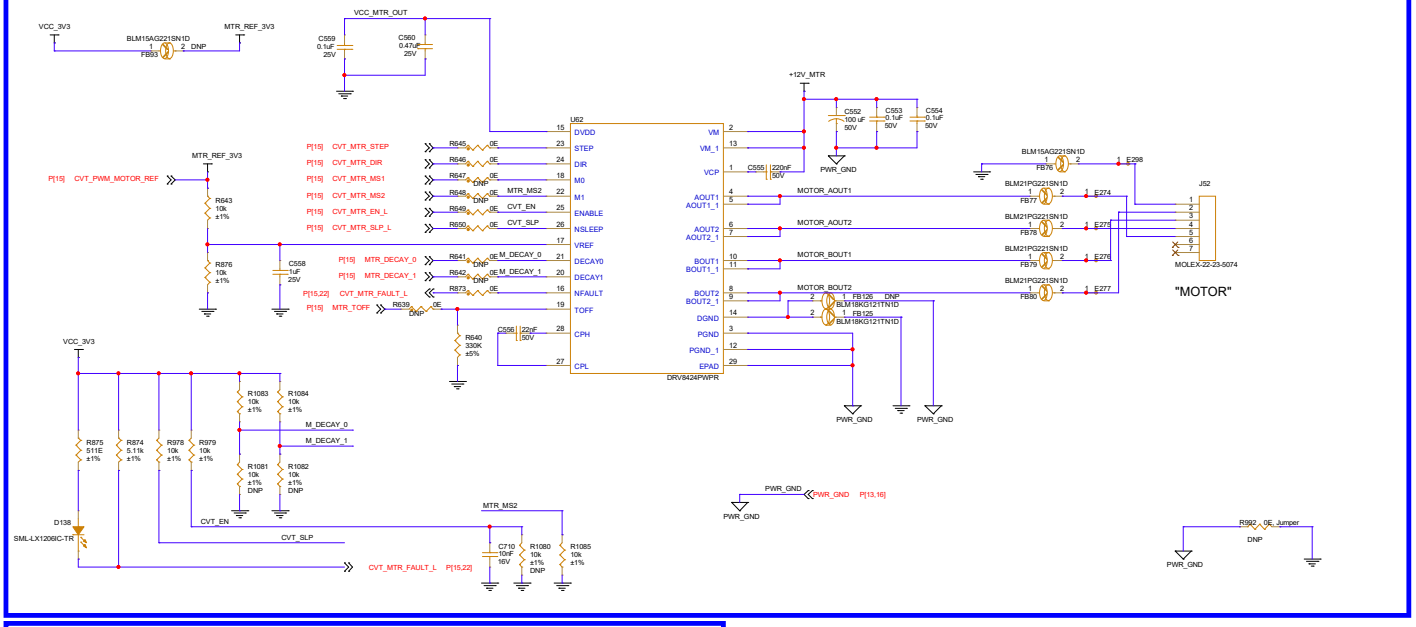

Thermal Sensor for Cuvette Stepper Motor

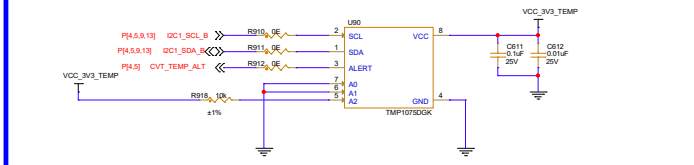

Note: Place U90 near U62 (CVT Motor Driver)
Addr: 1001100'b