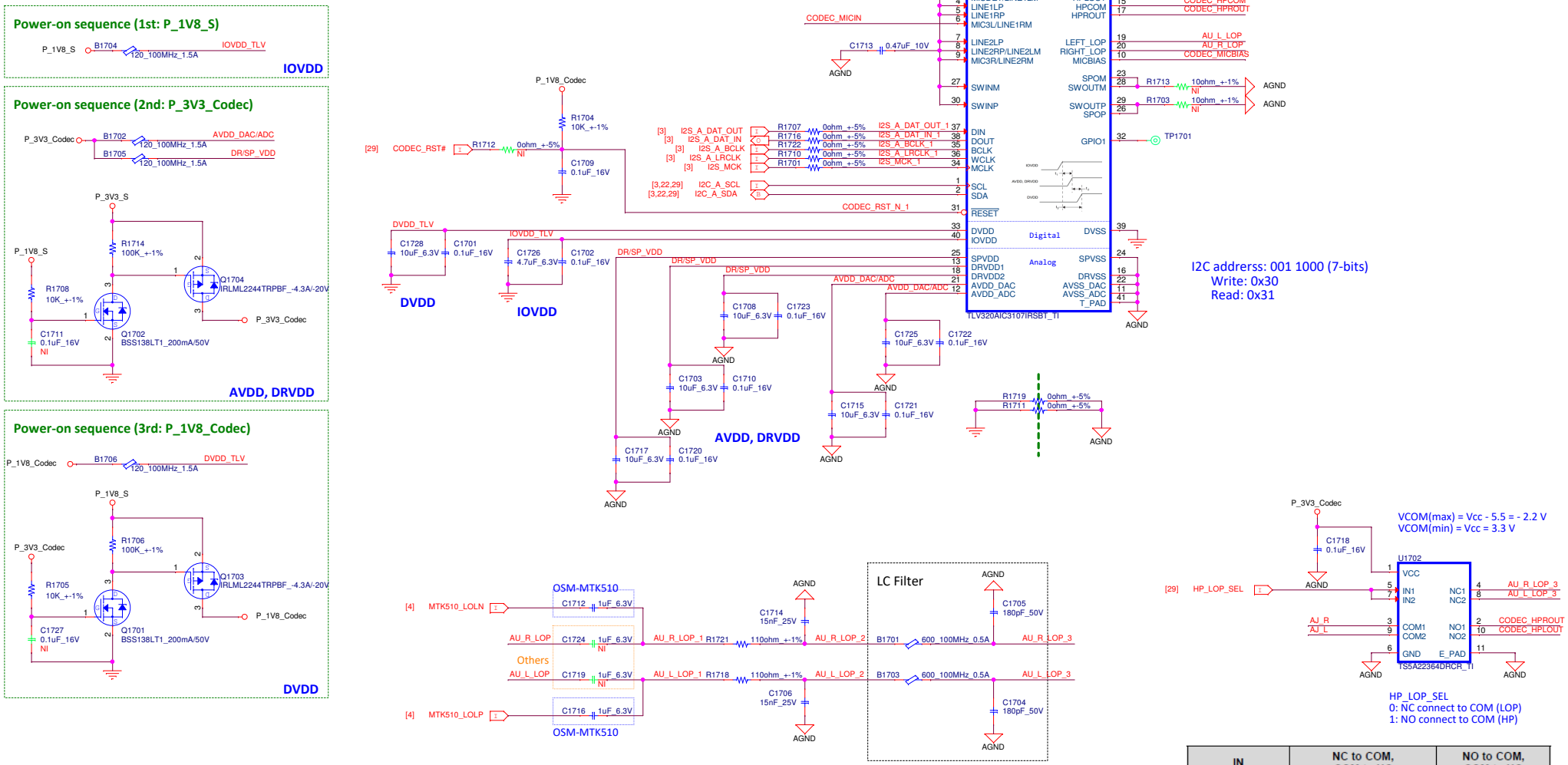

IN	NC to COM, COM to NC	NO to COM, COM to NO
L	ON	OFF
H	OFF	ON

Figure 40. TLV320AIC3107 Power Supply Sequencing

SYMBOL	PARAMETER	MIN	MAX	UNIT
t1	IOVDD to AVDD, DRVDD	0		ms
t2	AVDD to DVDD	0	4	
t3	IOVDD to DVDD	0		