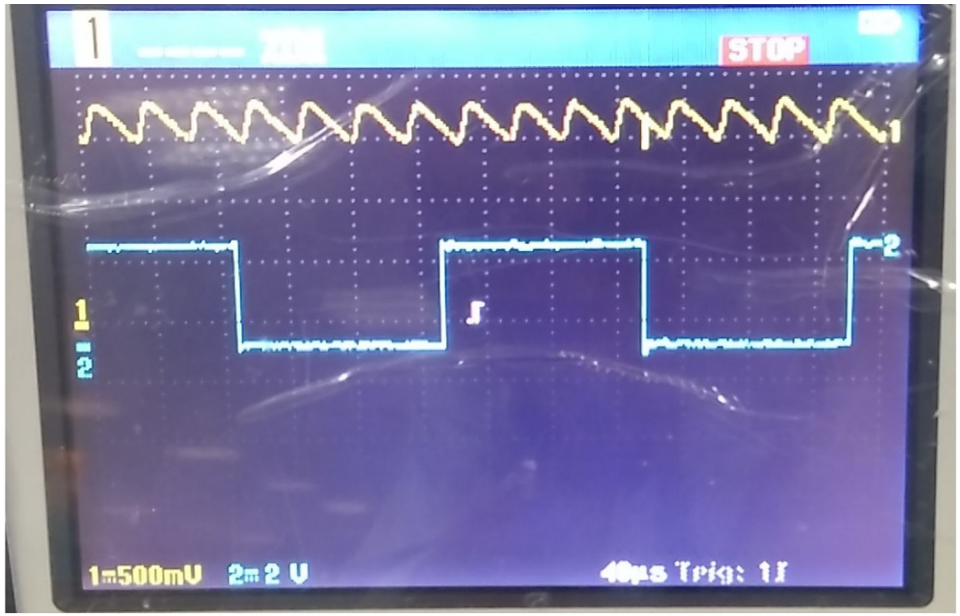

Condition

1. IC - TS3A24159 Removed, Pin 3- Pin 5 Shorted
2. Blue Waveform - PWM
3. Yellow Waveform - Switch IC TS3A24159 Output (CM)

Condition

1. IC - TS3A24159 assembled. IN1 Driven Low
2. Blue Waveform - PWM
3. Yellow Waveform - Switch IC TS3A24159 Output
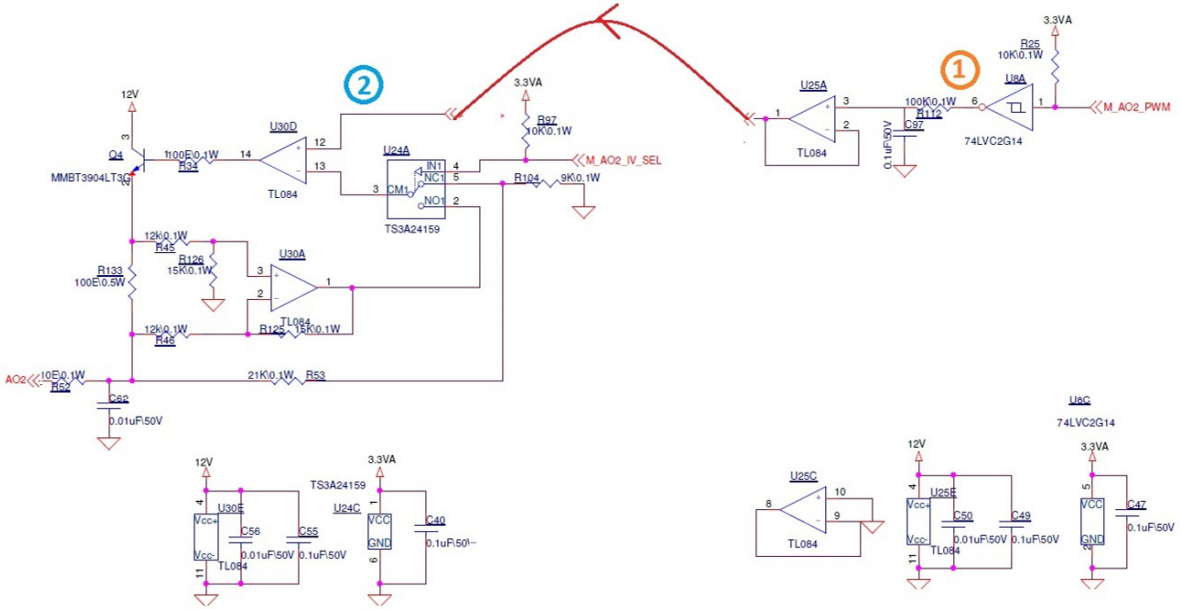
Problem: Ripples in output when IC - TS3A24159 (Analog Switch) is used.