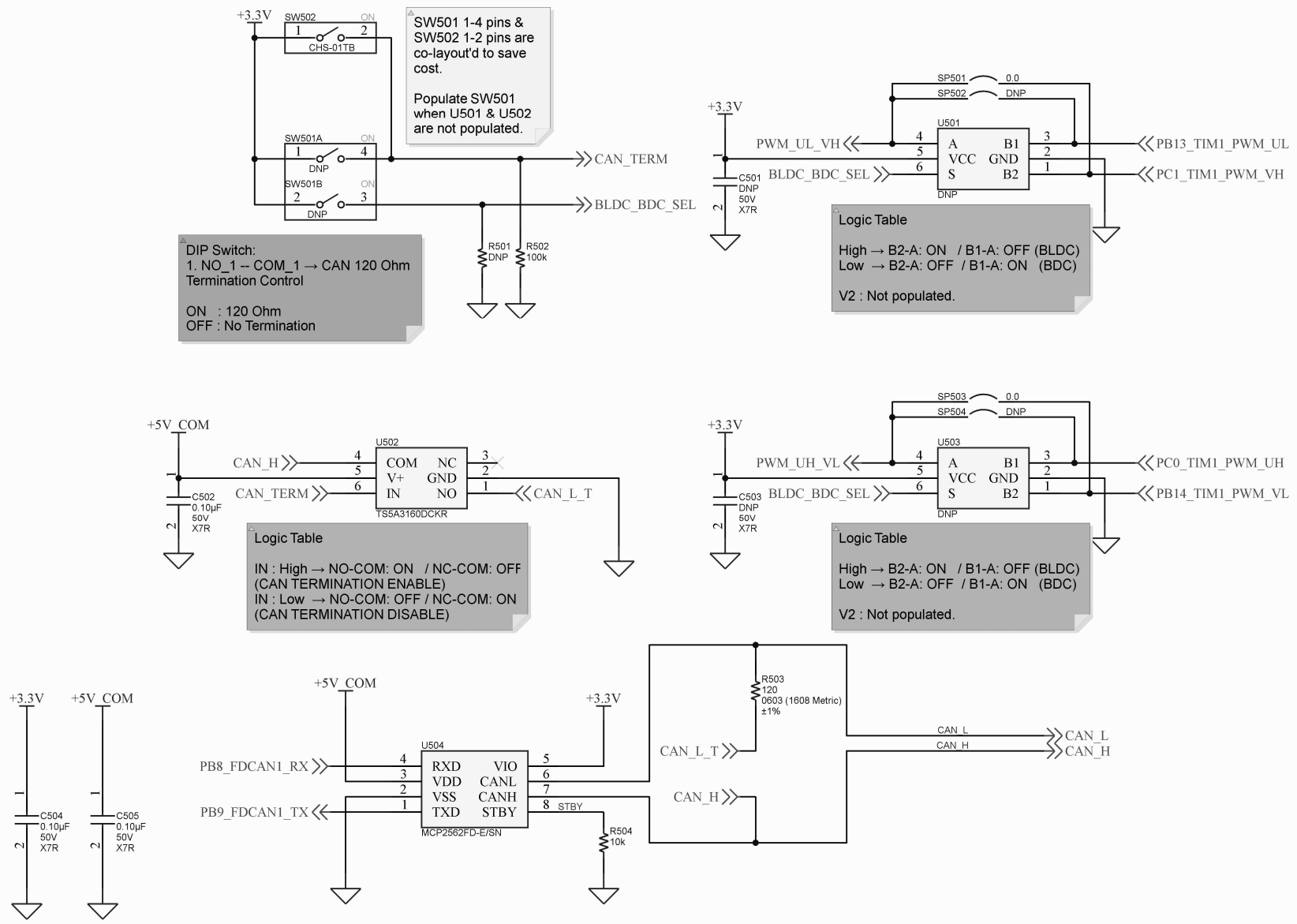

Title: *		Telexistence Inc.
A4	Document: * [No Variations]	
Author: *	Date: 2022/01/12	Rev: *
Filename: TX_BLDB_V2_05_CAN FD & MOTOR_TYP_SEL.SchDoc		Sheet * of *