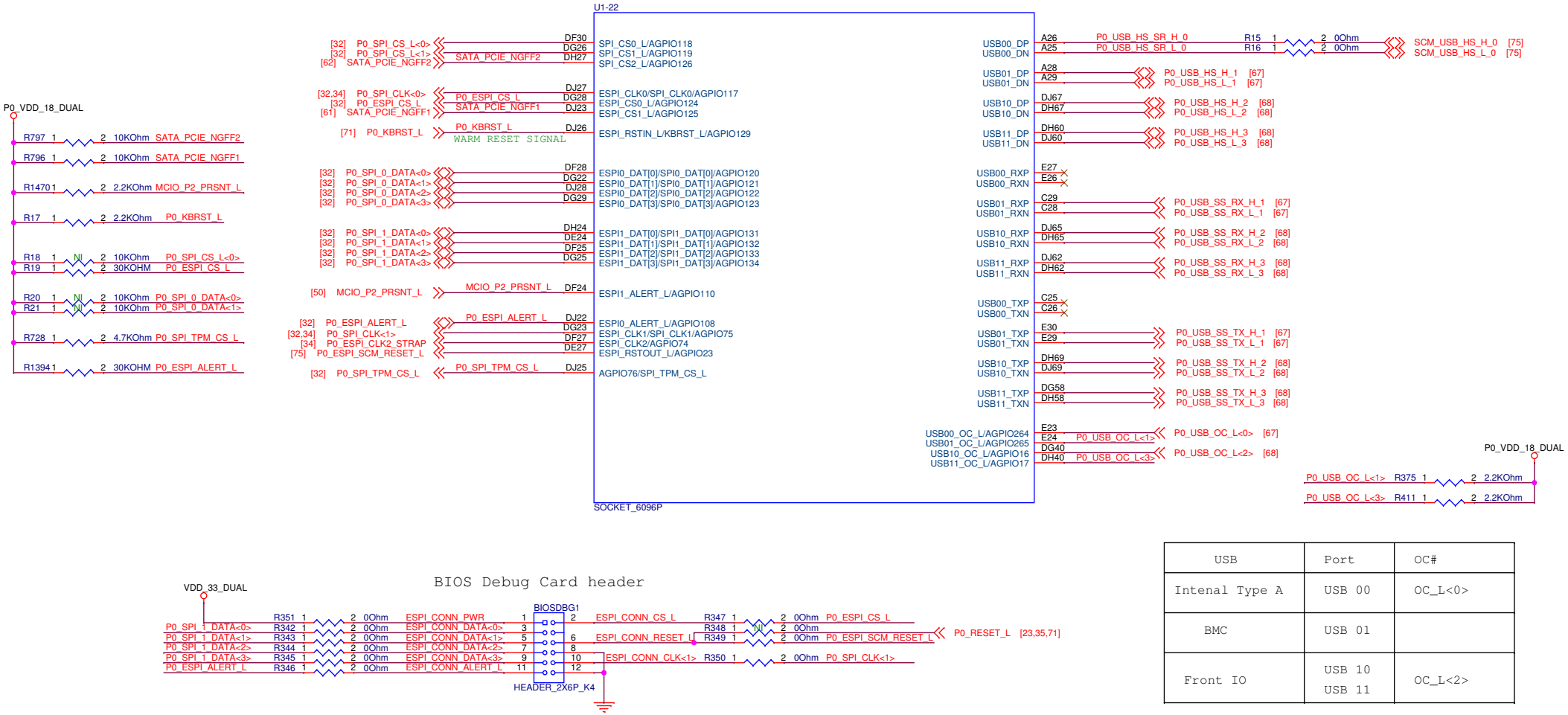

USB	Port	OC#
Intenal Type A	USB 00	OC_L<0>
BMC	USB 01	
Front IO	USB 10 USB 11	OC_L<2>

PEGATRON Title : P0 USB / SPI

PEGATRON CORP. Engineer: XXX

Size	Project Name	Rev
A3	XXXX-XX	001

Date: Wednesday, March 02, 2022 Sheet 22 of 400

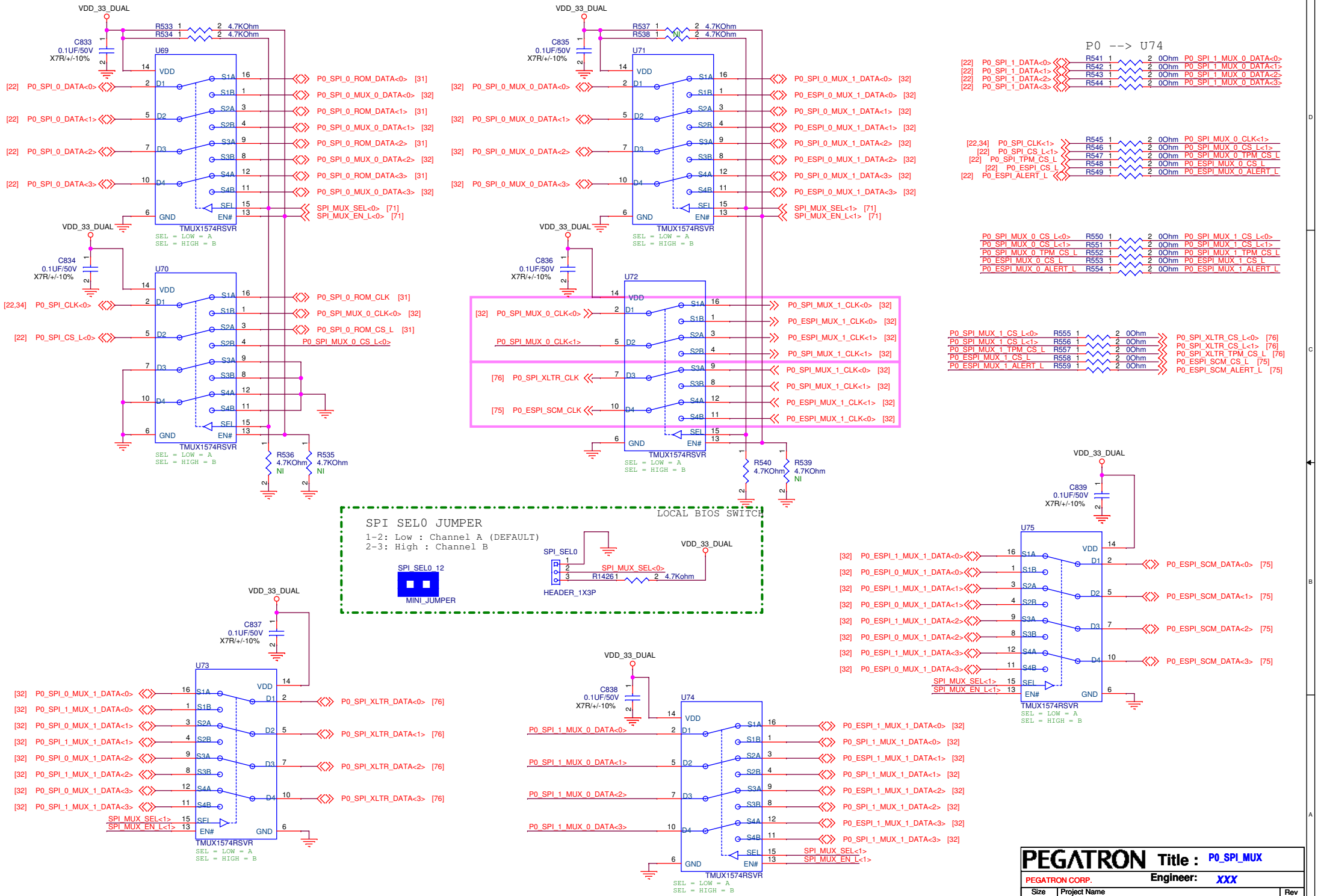
P0 --> U74
U69
U70
U71
U72
U73
U74
U75
TMUX1574RSVR
SEL = LOW = A
SEL = HIGH = B
VDD_33_DUAL
C833 0.1UF/50V X7R/+/-10%
C834 0.1UF/50V X7R/+/-10%
C835 0.1UF/50V X7R/+/-10%
C836 0.1UF/50V X7R/+/-10%
C837 0.1UF/50V X7R/+/-10%
C838 0.1UF/50V X7R/+/-10%
C839 0.1UF/50V X7R/+/-10%
R533 4.7KOhm
R534 4.7KOhm
R537 4.7KOhm NI
R538 4.7KOhm
R536 4.7KOhm NI
R535 4.7KOhm NI
R540 4.7KOhm
R539 4.7KOhm NI
R541 0Ohm P0_SPI_1_MUX_0_DATA<0>
R542 0Ohm P0_SPI_1_MUX_0_DATA<1>
R543 0Ohm P0_SPI_1_MUX_0_DATA<2>
R544 0Ohm P0_SPI_1_MUX_0_DATA<3>
R545 0Ohm P0_SPI_MUX_0_CLK<1>
R546 0Ohm P0_SPI_MUX_0_CS_L<1>
R547 0Ohm P0_SPI_MUX_0_TPM_CS_L
R548 0Ohm P0_ESPI_MUX_0_CS_L
R549 0Ohm P0_ESPI_MUX_0_ALERT_L
R550 0Ohm P0_SPI_MUX_1_CS_L<0>
R551 0Ohm P0_SPI_MUX_1_CS_L<1>
R552 0Ohm P0_SPI_MUX_1_TPM_CS_L
R553 0Ohm P0_ESPI_MUX_1_CS_L
R554 0Ohm P0_ESPI_MUX_1_ALERT_L
R555 0Ohm P0_SPI_XLTR_CS_L<0> [76]
R556 0Ohm P0_SPI_XLTR_CS_L<1> [76]
R557 0Ohm P0_SPI_XLTR_TPM_CS_L [76]
R558 0Ohm P0_ESPI_SCM_CS_L [75]
R559 0Ohm P0_ESPI_SCM_ALERT_L [75]
SPI SEL0 JUMPER
1-2: Low : Channel A (DEFAULT)
2-3: High : Channel B
LOCAL BIOS SWITCH
SPI_SEL0_12
MINI_JUMPER
SPI_SEL0
SPI_MUX_SEL<0>
R14261 4.7Kohm
HEADER_1X3P
PEGATRON
Title : P0_SPI_MUX
PEGATRON CORP.
Engineer: XXX
Size A3
Project Name XXXX-XX
Rev 001
Date: Wednesday, March 02, 2022
Sheet 32 of 400

DC SCM CONNECTOR

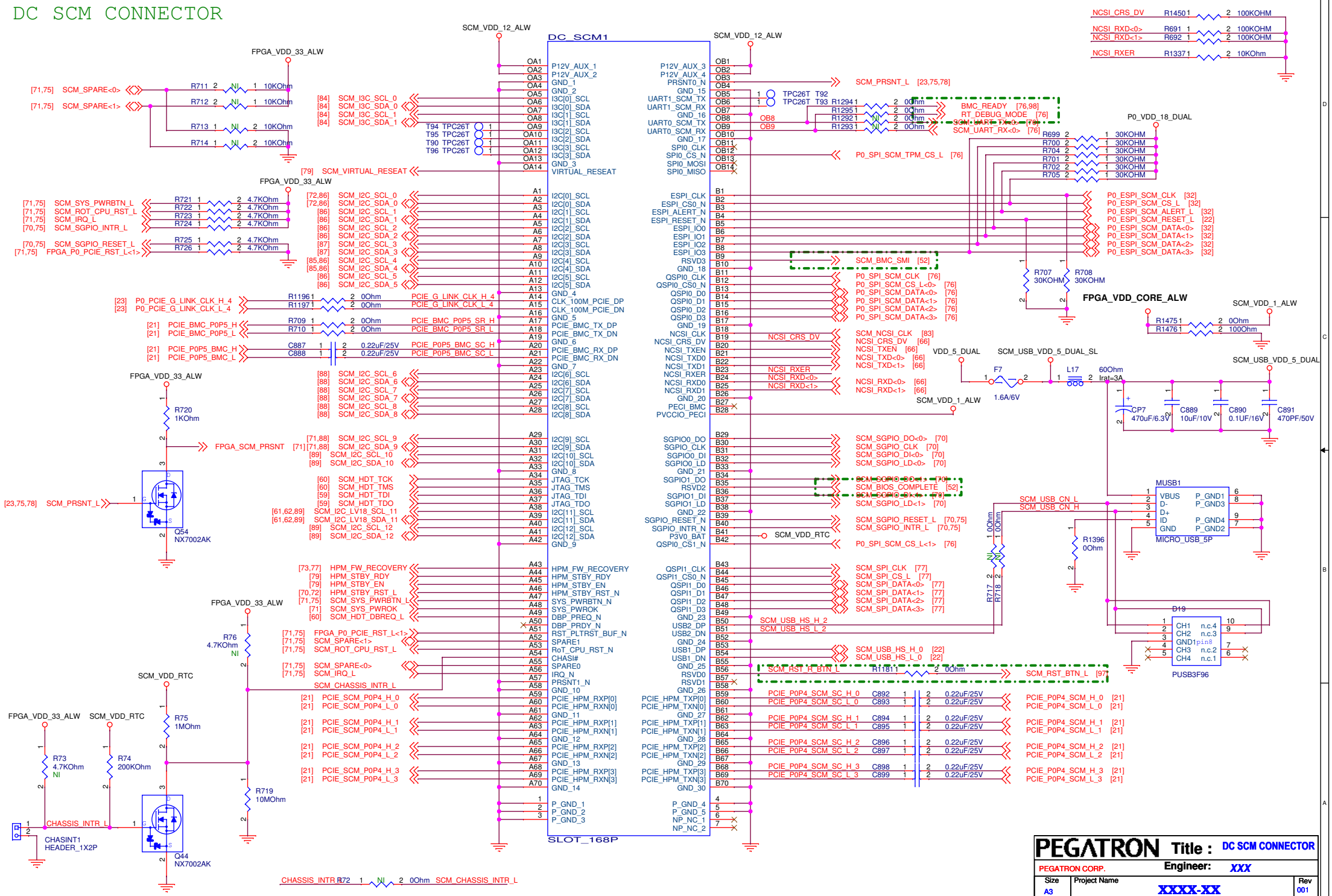

PEGATRON	Title :	DC SCM CONNECTOR
PEGATRON CORP.	Engineer:	XXX
Size A3	Project Name XXXX-XX	Rev 001
Date: Wednesday, March 02, 2022	Sheet 75 of 400	

DC SCM VOLTAGE XTLR

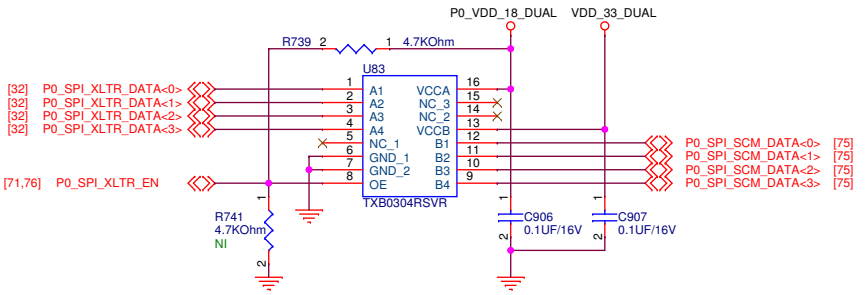

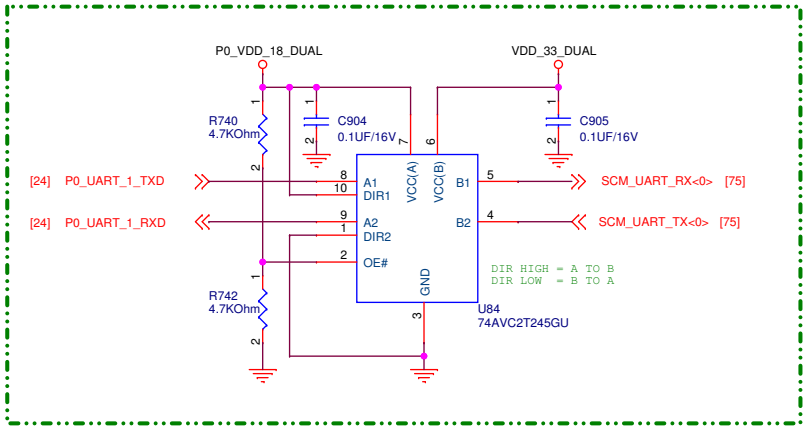

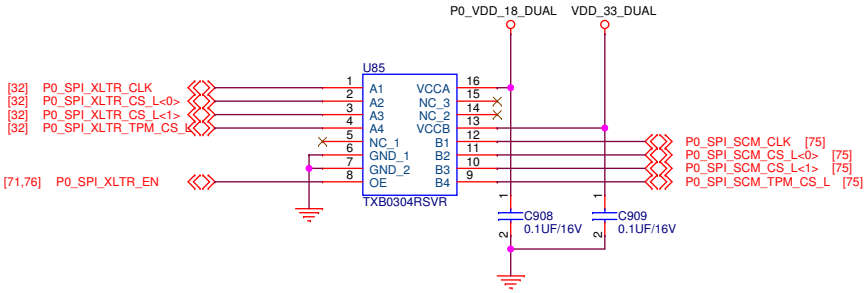

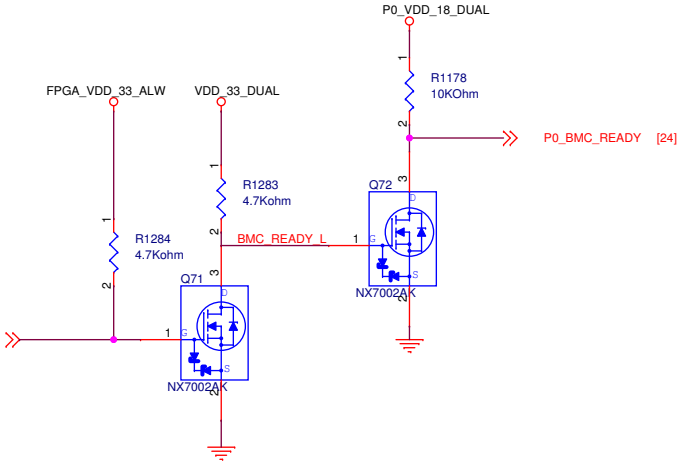

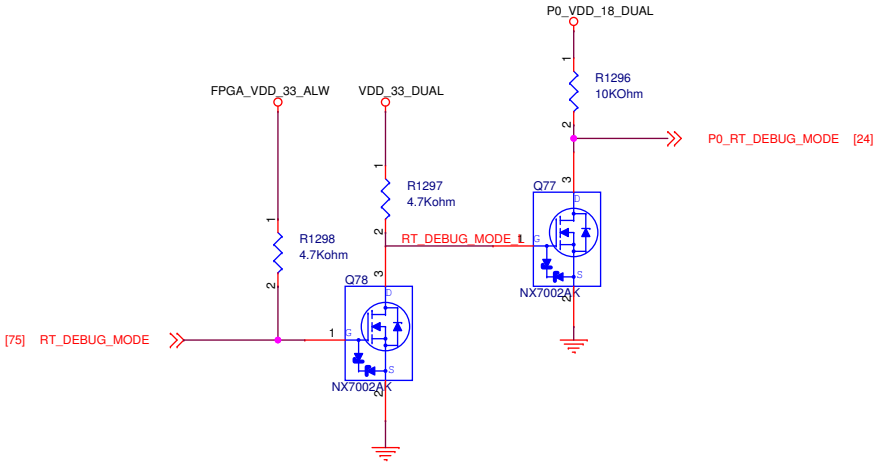

PEGATRON	Title : DC_SCM_VOLTAGE_XTLR	
PEGATRON CORP.	Engineer: XXX	
Size A3	Project Name XXXX-XX	Rev 001
Date: Wednesday, March 02, 2022	Sheet 76 of 400	