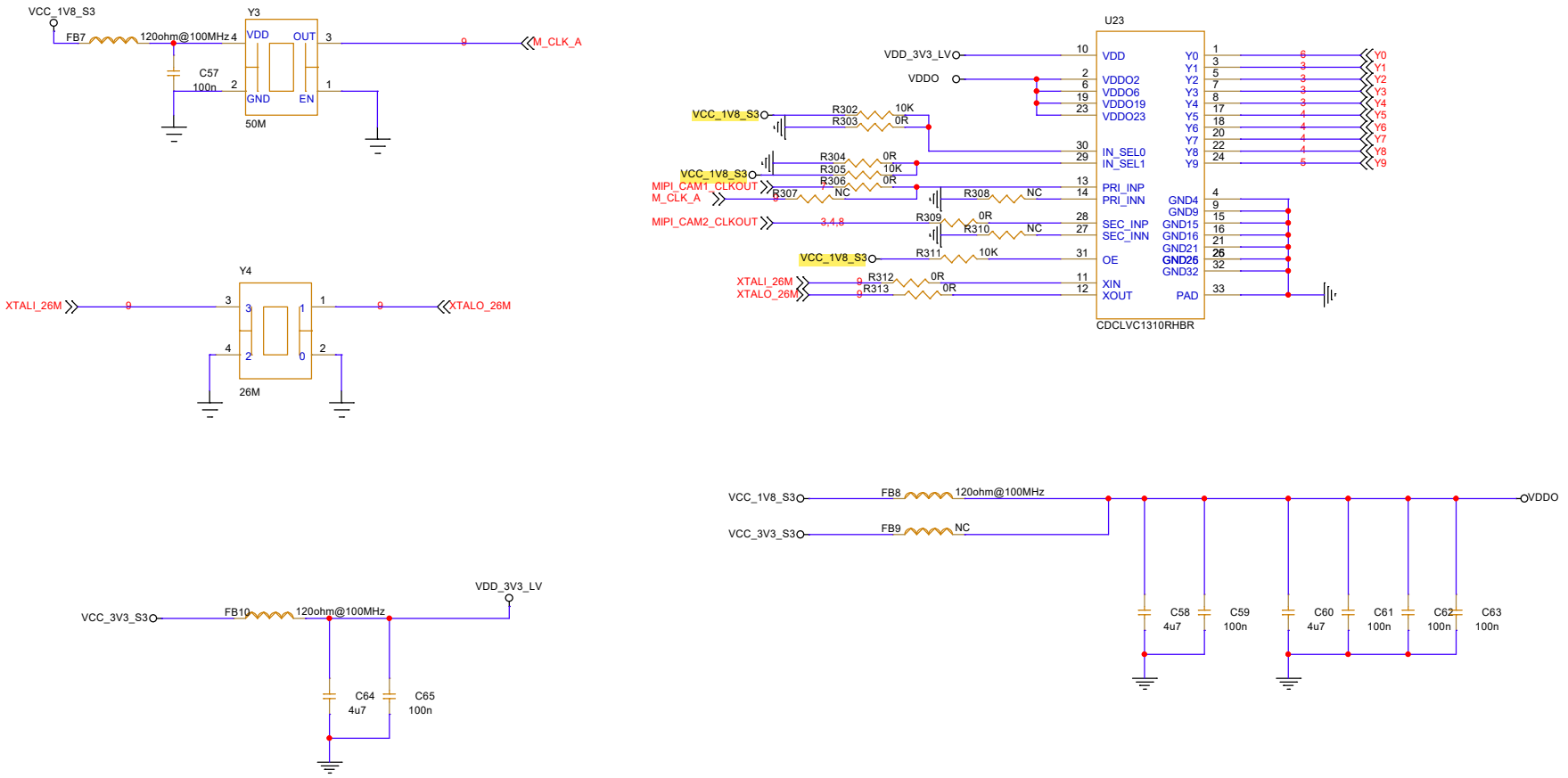
VCC_1V8_S3
FB7
120ohm@100MHz
Y3
VDD
OUT
GND
EN
50M
C57
100n
M_CLK_A
Y4
26M
XTALI_26M
XTALO_26M
U23
CDCLVC1310RHBR
VDD_3V3_LV
VDDO
VDD
VDDO2
VDDO6
VDDO19
VDDO23
IN_SEL0
IN_SEL1
PRI_INP
PRI_INN
SEC_INP
SEC_INN
OE
XIN
XOUT
PAD
GND4
GND9
GND15
GND16
GND21
GND26
GND32
R302
R303
R304
R305
R306
R307
R308
R309
R310
R311
R312
R313
10K
0R
NC
MIPI_CAM1_CLKOUT
M_CLK_A
MIPI_CAM2_CLKOUT
VCC_3V3_S3
FB8
FB9
FB10
120ohm@100MHz
VDDO
VDD_3V3_LV
C58
4u7
C59
100n
C60
4u7
C61
100n
C62
100n
C63
100n
C64
4u7
C65
100n