CLOCK GENERATOR

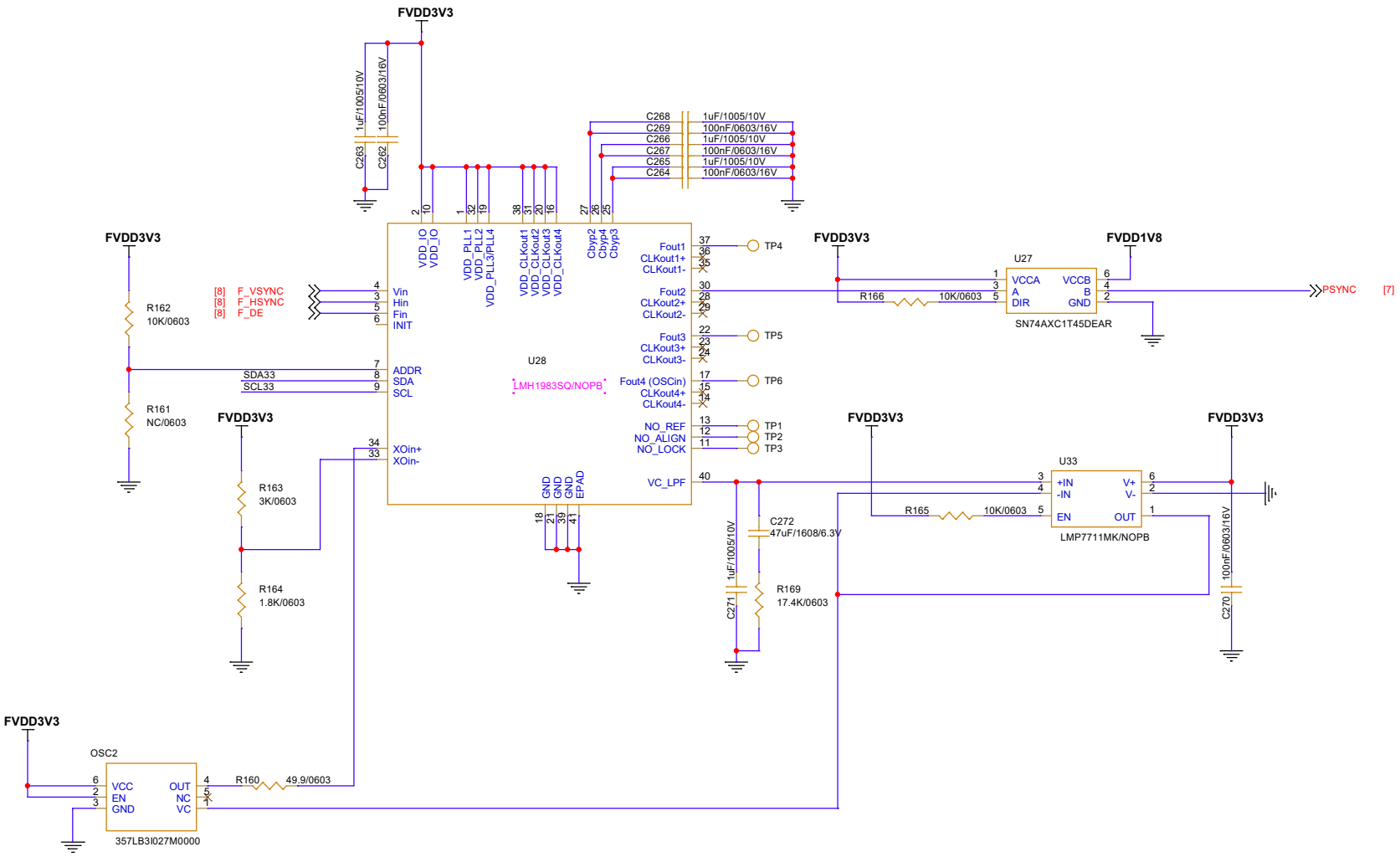

I2C LEVEL SHIFT

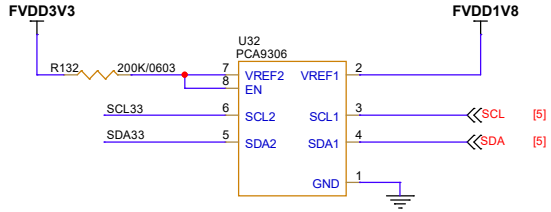

Title	MIL LWIR CAM HD-SDI INTERFACE FPGA		
Size A3	Document Name CLOCK GENERATOR	Designer LJW	Rev V2.0
Date: Thursday, March 19, 2026		Sheet 9 of 9	