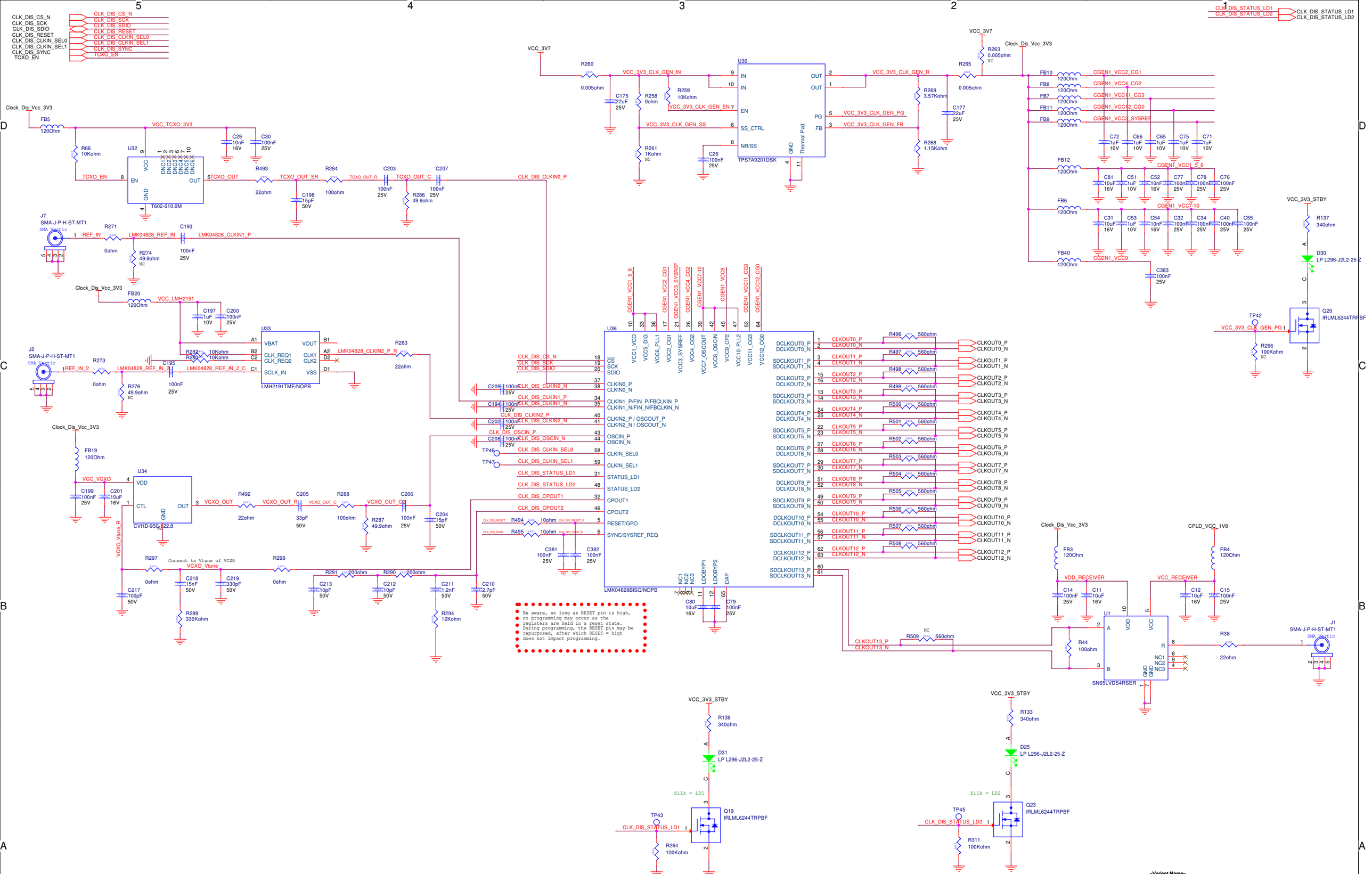


<Variant Name>

dgtronix LTD
6 Galgaley Haplada St.
Ph: +972-9-9660966
Fax: +972-9-9660969
www.dgtronix-tech.com

| | | |
|---|---|---|
| Project: QM_HOST_BOARD | | Designer: Dgtronix |
| Size: A2 | Part / Document Description: Clock Gen | Rev: A |
| Date: Sunday, June 23, 2019 | Sheet: 57 of: 61 | |