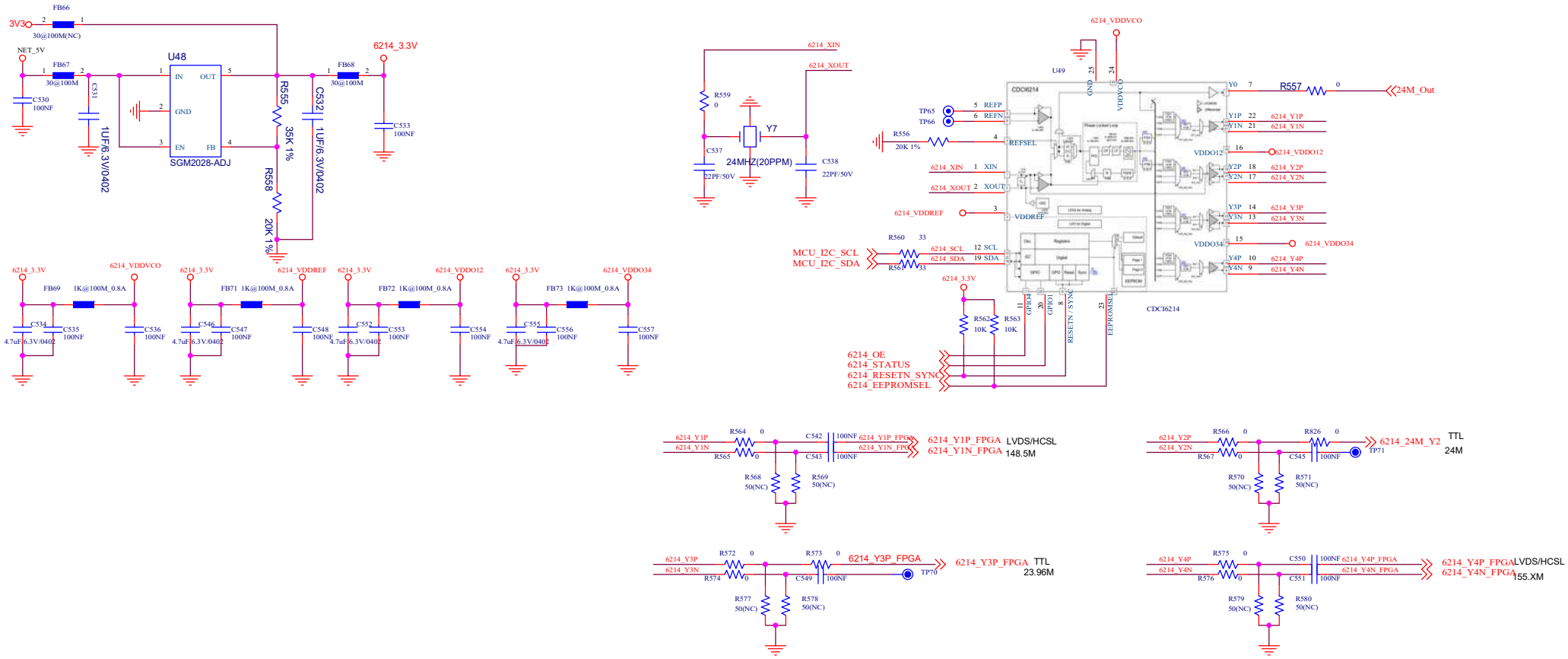
3V3
FB66
30@100M(NC)
NET_5V
FB67
30@100M
C530
100NF
C531
1UF/6.3V/0402
U48
IN
OUT
GND
EN
FB
SGM2028-ADJ
R555
35K 1%
R558
20K 1%
C532
1UF/6.3V/0402
FB68
30@100M
6214_3.3V
C533
100NF
6214_XIN
6214_XOUT
R559
0
Y7
24MHZ(20PPM)
C537
22PF/50V
C538
22PF/50V
6214_VDDVCO
U49
CDCI6214
GND
VDDVCO
TP65
TP66
REFP
REFN
REFSEL
R556
20K 1%
XIN
XOUT
6214_VDDREF
VDDREF
R560
33
R561
33
MCU_I2C_SCL
MCU_I2C_SDA
6214_SCL
6214_SDA
SCL
SDA
6214_3.3V
R562
10K
R563
10K
GPIO4
GPIO1
RESETN_SYNC
EEPROMSEL
6214_OE
6214_STATUS
6214_RESETN_SYNC
6214_EEPROMSEL
Y0
R557
0
24M_Out
Y1P
Y1N
6214_Y1P
6214_Y1N
VDDO12
6214_VDDO12
Y2P
Y2N
6214_Y2P
6214_Y2N
Y3P
Y3N
6214_Y3P
6214_Y3N
VDDO34
6214_VDDO34
Y4P
Y4N
6214_Y4P
6214_Y4N
FB69
1K@100M_0.8A
6214_VDDVCO
C534
4.7uF/6.3V/0402
C535
100NF
C536
100NF
FB71
1K@100M_0.8A
6214_VDDREF
C546
4.7uF/6.3V/0402
C547
100NF
C548
100NF
FB72
1K@100M_0.8A
6214_VDDO12
C552
4.7uF/6.3V/0402
C553
100NF
C554
100NF
FB73
1K@100M_0.8A
6214_VDDO34
C555
4.7uF/6.3V/0402
C556
100NF
C557
100NF
6214_Y1P
6214_Y1N
R564
0
R565
0
C542
100NF
C543
100NF
6214_Y1P_FPGA
6214_Y1N_FPGA
R568
50(NC)
R569
50(NC)
6214_Y1P_FPGA
6214_Y1N_FPGA
LVDS/HCSL
148.5M
6214_Y2P
6214_Y2N
R566
0
R567
0
R826
0
C545
100NF
TP71
6214_24M_Y2
TTL
24M
R570
50(NC)
R571
50(NC)
6214_Y3P
6214_Y3N
R572
0
R574
0
R573
0
C549
100NF
6214_Y3P_FPGA
TP70
6214_Y3P_FPGA
TTL
23.96M
R577
50(NC)
R578
50(NC)
6214_Y4P
6214_Y4N
R575
0
R576
0
C550
100NF
C551
100NF
6214_Y4P_FPGA
6214_Y4N_FPGA
6214_Y4P_FPGA
6214_Y4N_FPGA
LVDS/HCSL
155.XM
R579
50(NC)
R580
50(NC)