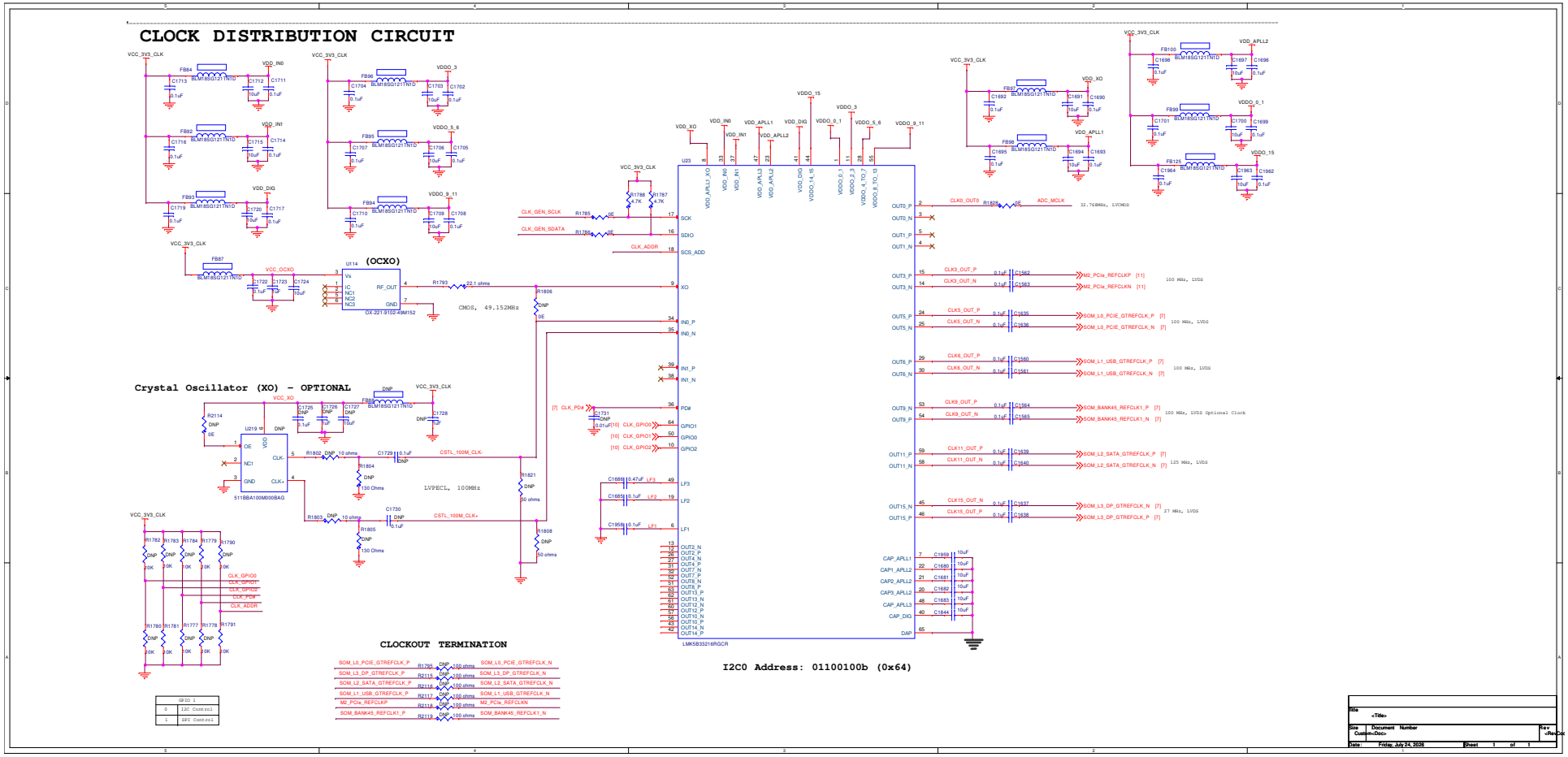
CLOCK DISTRIBUTION CIRCUIT
(OCXO)
CMOS, 49.152MHz
Crystal Oscillator (XO) - OPTIONAL
LVPECL, 100MHz
CLOCKOUT TERMINATION
I2C0 Address: 01100100b (0x64)
LMKSB33216RGCR
32.768MHz, LVCMOS
100 MHz, LVDS
100 MHz, LVDS Optional Clock
125 MHz, LVDS
27 MHz, LVDS
GPIO 1
0 I2C Control
1 SPI Control
Title
<Title>
Size Custom
Document Number <Doc>
Rev <Rev>
Date: Friday, July 24, 2026
Sheet 1 of 1