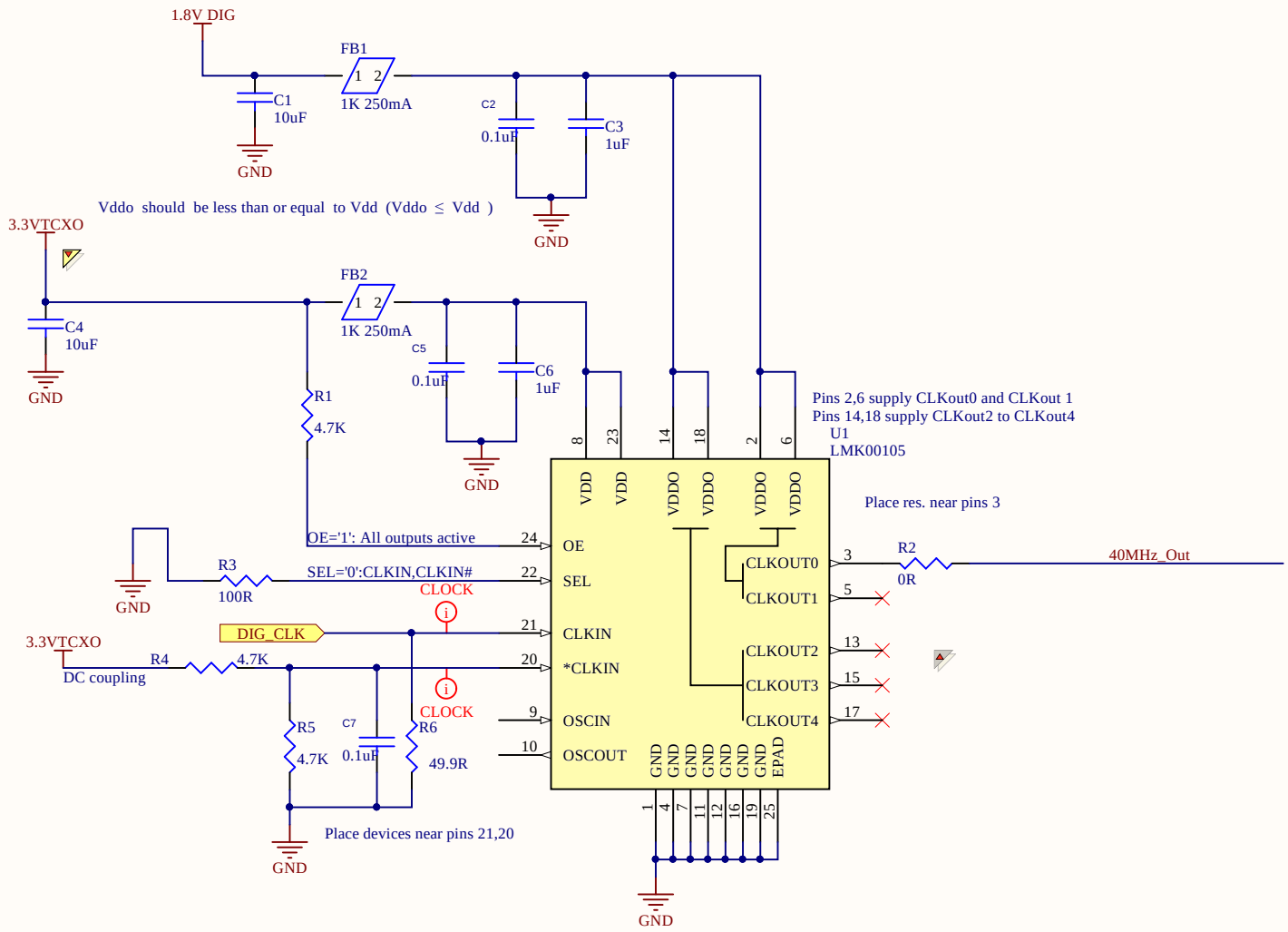

Title		
Size A4	Number	Revision
Date: 04/03/2018	Sheet of	
File: C:\Users\amig\Desktop\Sheet1.SchDoc	Drawn By:	