2.1.6 Detailed LMK04816 Block Diagram

Figure 2-6 illustrates the complete LMK04816 block diagram for the LMK04816 family.

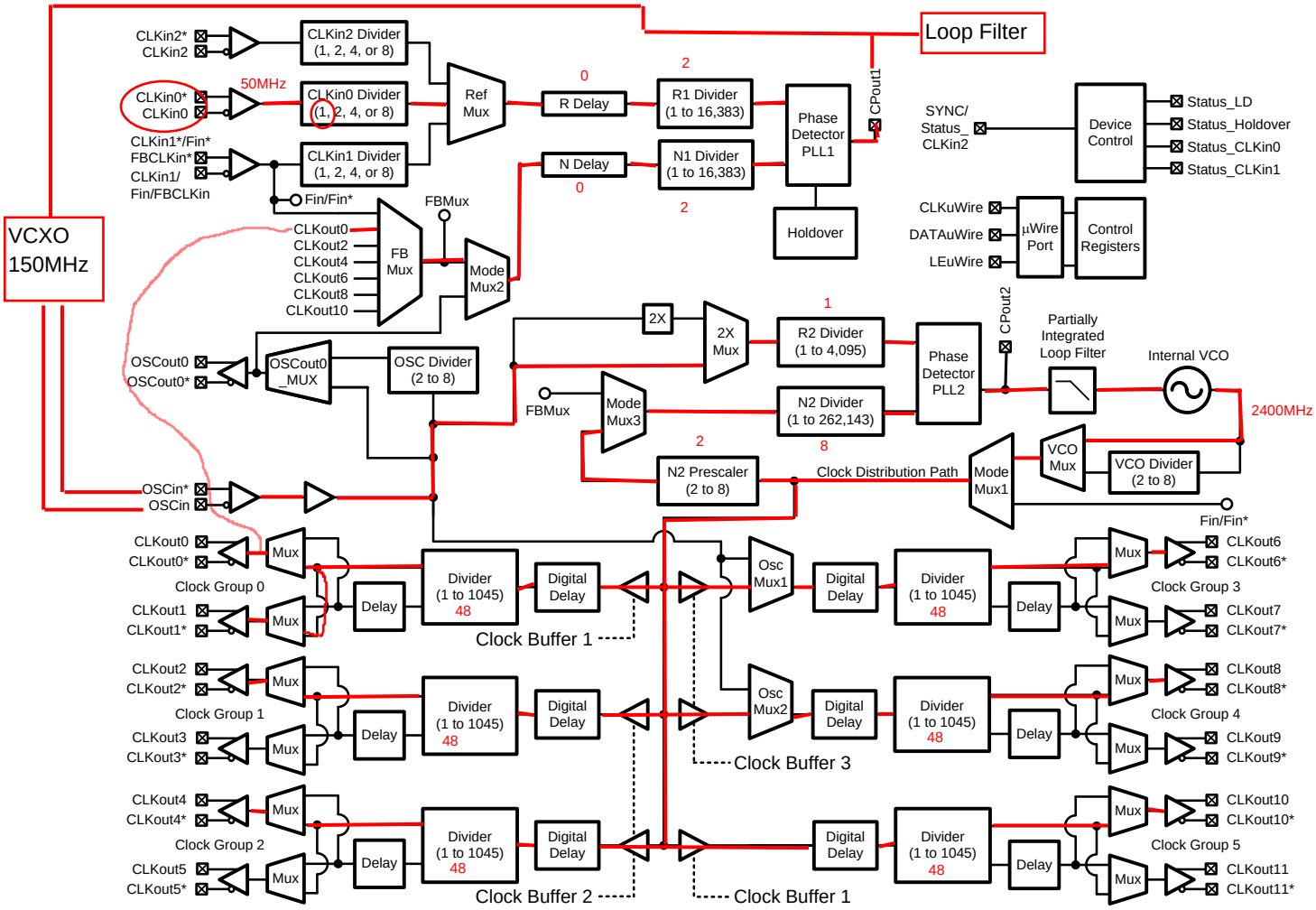

Figure 2-6. Detailed LMK04816 Block Diagram