Clock Cleaner

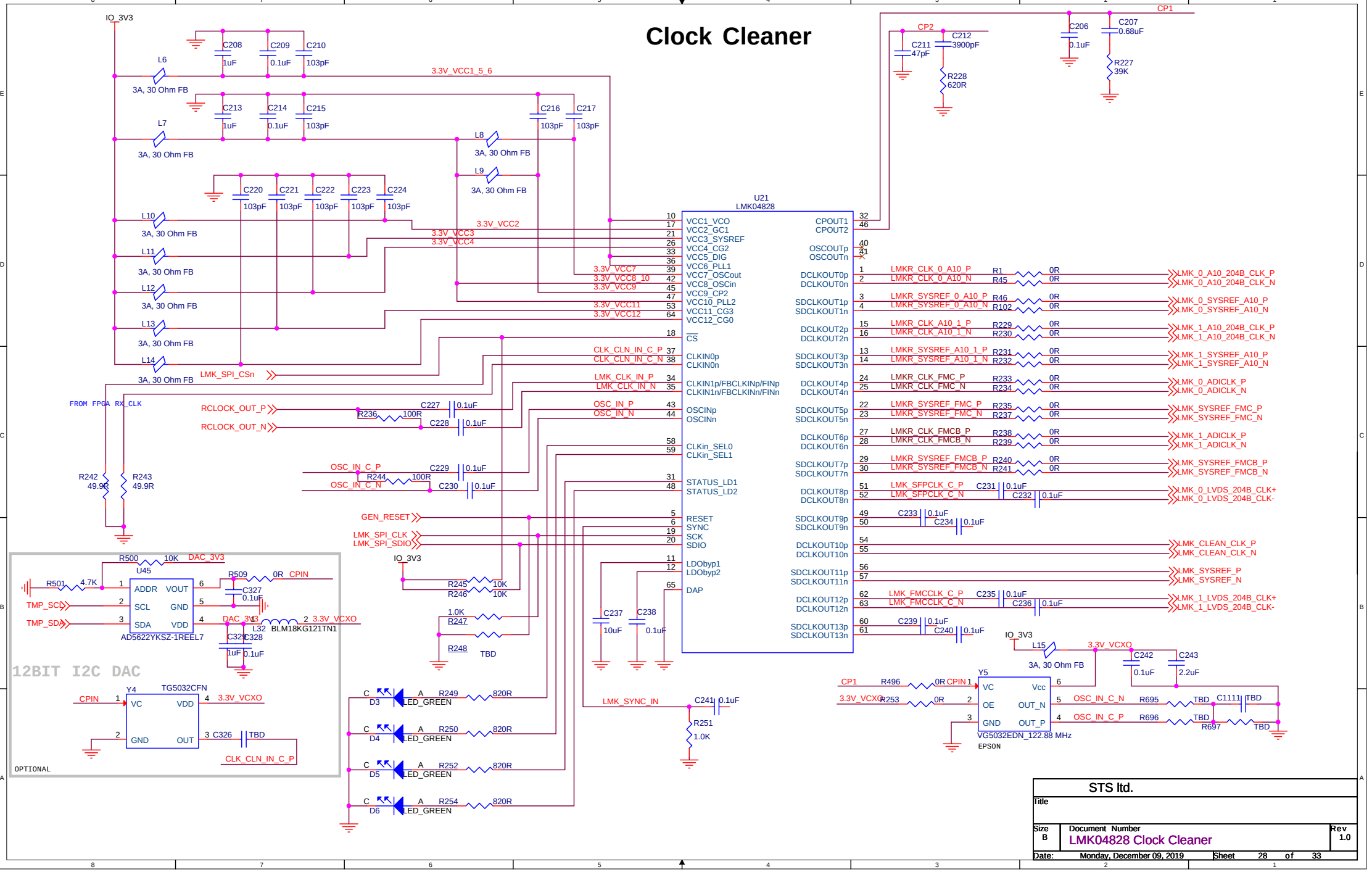

STS ltd.

Title

Size	Document Number	Rev
B	LMK04828 Clock Cleaner	1.0

Date: Monday, December 09, 2019 Sheet 28 of 33