CLOCK DISTRIBUTION CIRCUIT

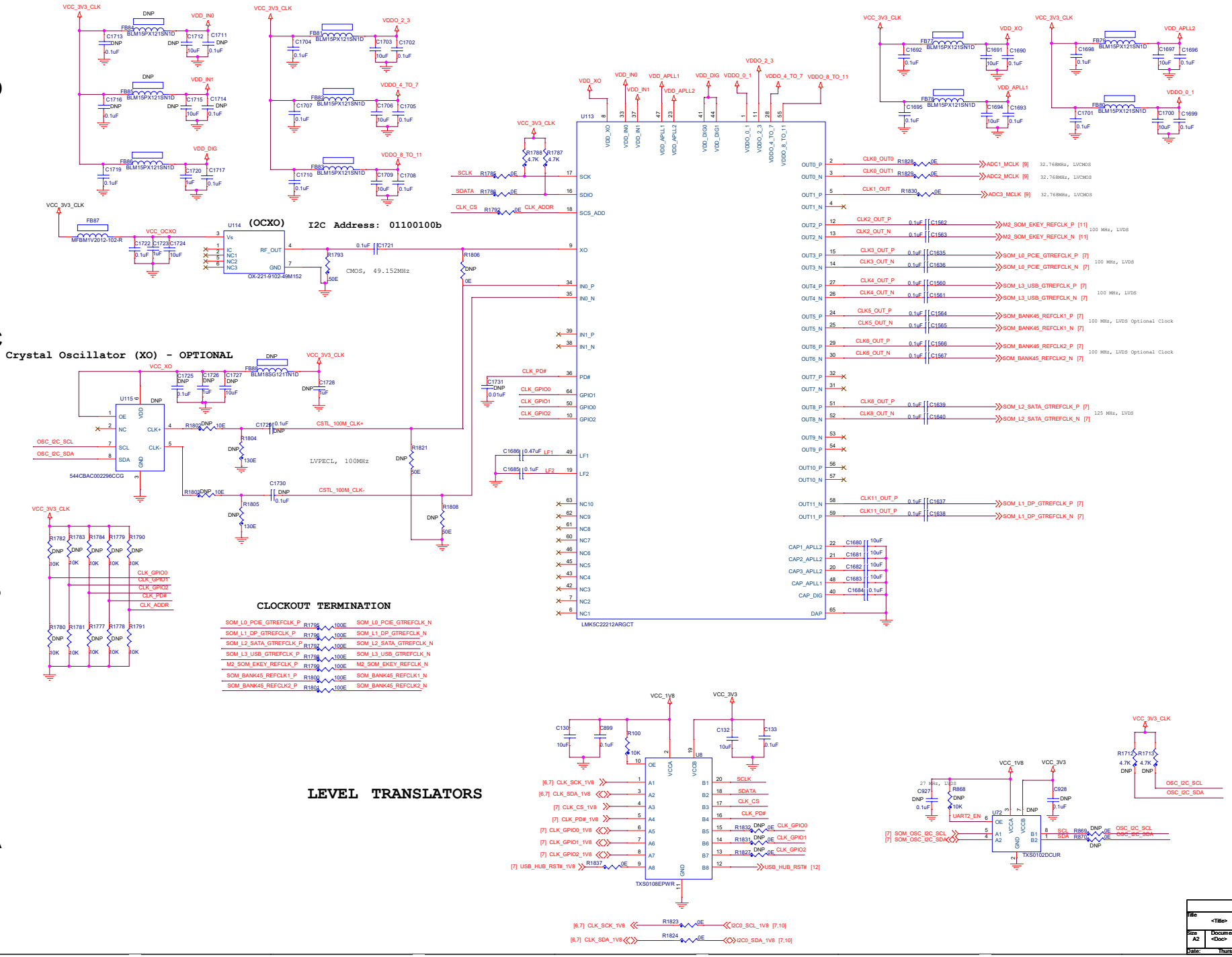

Title	<Title>	
Size A2	Document Number <Doc>	Rev <Rev>
Date: Thursday, December 04, 2025	Sheet 1 of 1	