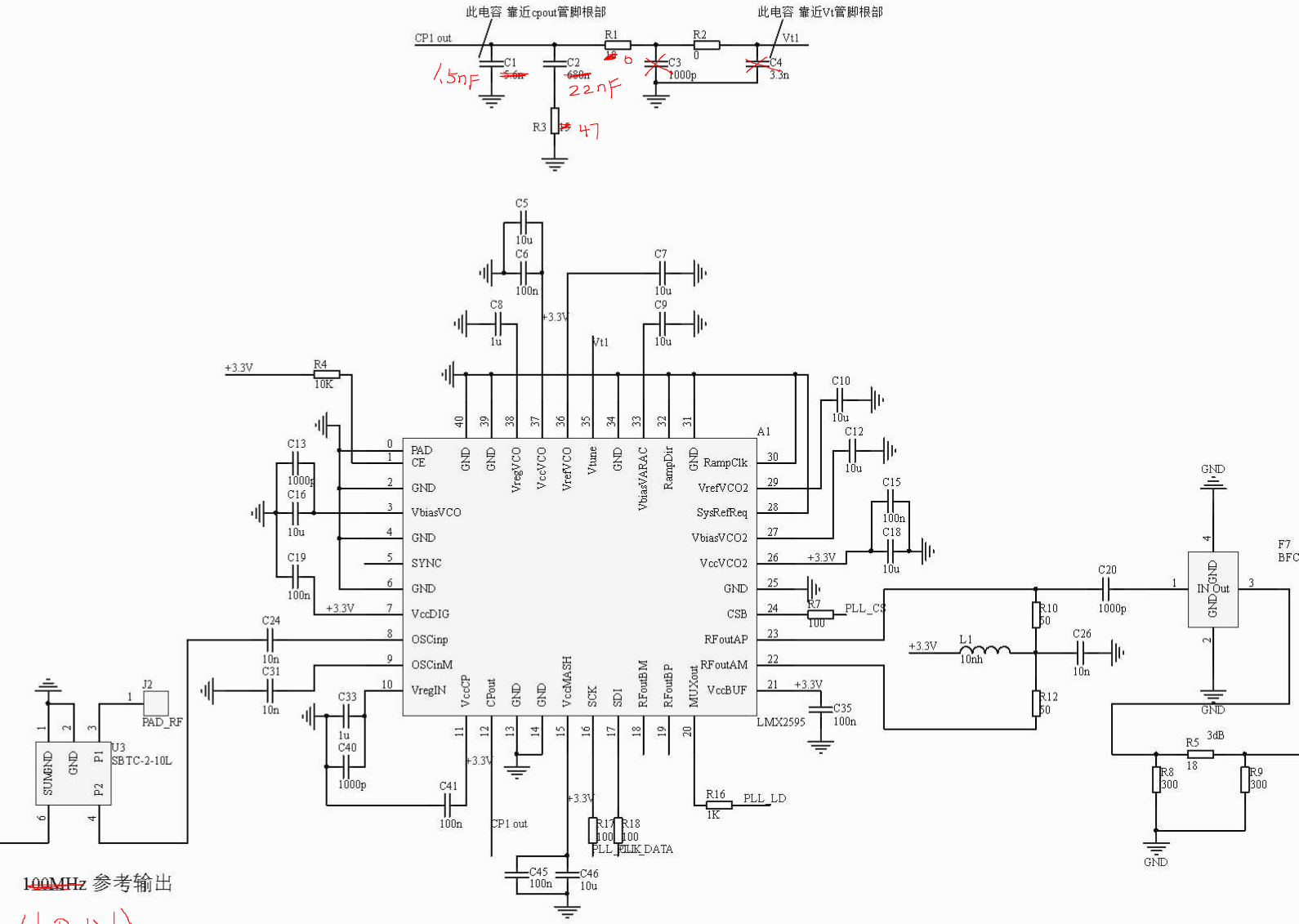
此电容 靠近cpout管脚根部
此电容 靠近Vt管脚根部
CP1 out
Vt1
R1
R2
C1
C2
C3
C4
R3
1.5nF
22nF
47
C5
C6
C7
C8
C9
C10
C12
C13
C15
C16
C18
C19
C20
C24
C26
C31
C33
C35
C40
C41
C45
C46
R4
R5
R7
R8
R9
R10
R12
R16
R17
R18
L1
J2
PAD_RF
U3
SBTC-2-10L
LMX2595
PAD
CE
GND
VbiasVCO
SYNC
VccDIG
OSCinp
OSCinM
VregIN
VregVCO
VccVCO
VrefVCO
Vtune
VbiasVARAC
RampDir
RampClk
VrefVCO2
SysRefReq
VbiasVCO2
VccVCO2
CSB
RFoutAP
RFoutAM
VccBUF
VccCP
CPout
VccMASH
SCK
SDI
RFoutBM
RFoutBP
MUXout
PLL_CS
PLL_LD
PLL_CLK_DATA
F7
BFC
3dB
100MHz 参考输出
40 MHz