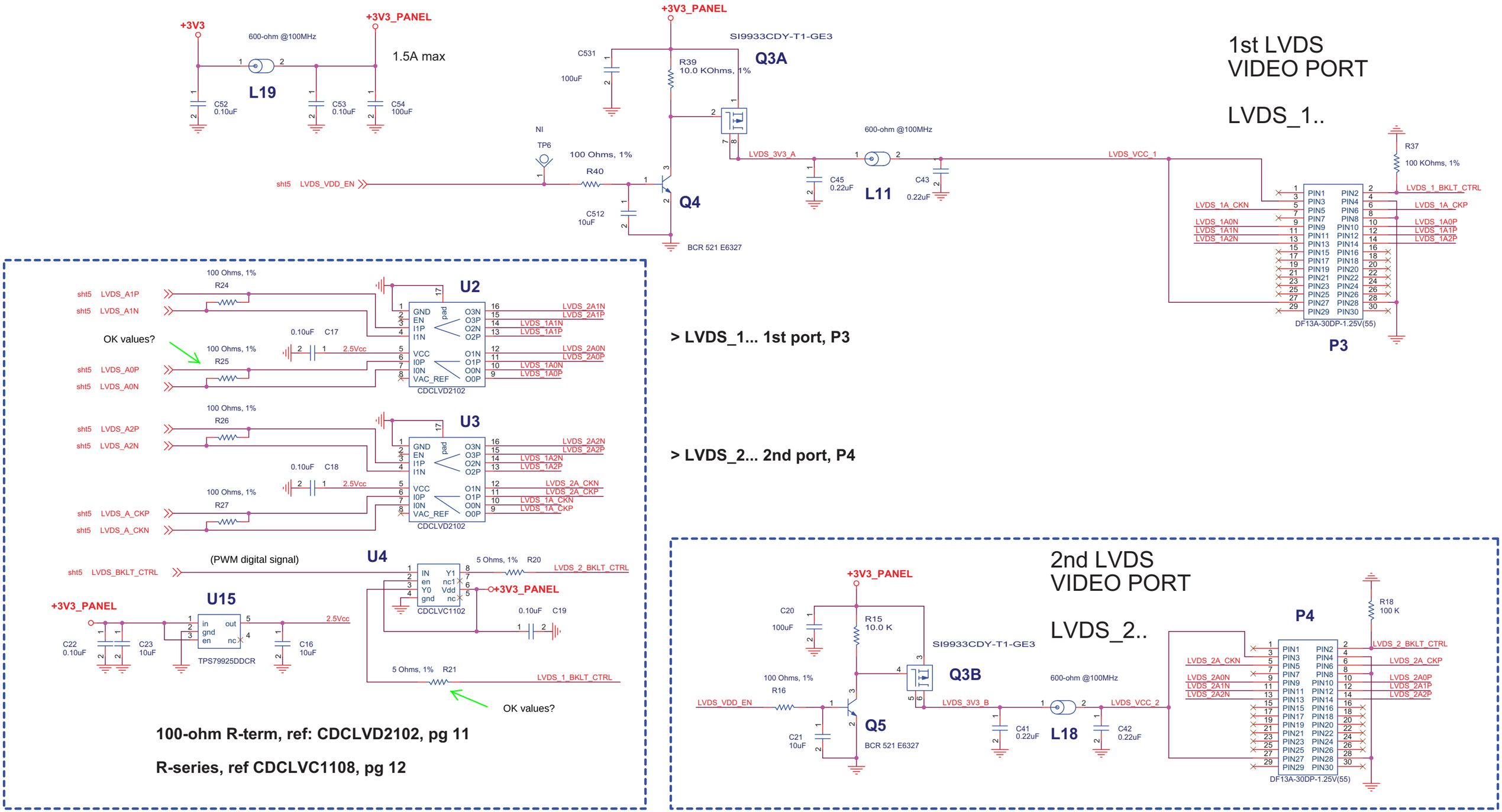
1st LVDS
VIDEO PORT
LVDS_1..
+3V3
+3V3_PANEL
600-ohm @100MHz
1.5A max
L19
C52
0.10uF
C53
0.10uF
C54
100uF
+3V3_PANEL
SI9933CDY-T1-GE3
Q3A
C531
100uF
R39
10.0 KOhms, 1%
NI
TP6
100 Ohms, 1%
R40
sht5 LVDS_VDD_EN
C512
10uF
Q4
BCR 521 E6327
LVDS_3V3_A
600-ohm @100MHz
C45
0.22uF
L11
C43
0.22uF
LVDS_VCC_1
R37
100 KOhms, 1%
LVDS_1_BKLT_CTRL
LVDS_1A_CKN
LVDS_1A_CKP
LVDS_1A0N
LVDS_1A0P
LVDS_1A1N
LVDS_1A1P
LVDS_1A2N
LVDS_1A2P
DF13A-30DP-1.25V(55)
P3
> LVDS_1... 1st port, P3
100 Ohms, 1%
R24
sht5 LVDS_A1P
sht5 LVDS_A1N
U2
GND
EN
I1P
I1N
VCC
I0P
I0N
VAC_REF
O3N
O3P
O2N
O2P
O1N
O1P
O0N
O0P
pad
LVDS_2A1N
LVDS_2A1P
LVDS_1A1N
LVDS_1A1P
LVDS_2A0N
LVDS_2A0P
LVDS_1A0N
LVDS_1A0P
CDCLVD2102
OK values?
0.10uF C17
2.5Vcc
100 Ohms, 1%
R25
sht5 LVDS_A0P
sht5 LVDS_A0N
100 Ohms, 1%
R26
sht5 LVDS_A2P
sht5 LVDS_A2N
U3
LVDS_2A2N
LVDS_2A2P
LVDS_1A2N
LVDS_1A2P
0.10uF C18
2.5Vcc
LVDS_2A_CKN
LVDS_2A_CKP
LVDS_1A_CKN
LVDS_1A_CKP
100 Ohms, 1%
R27
sht5 LVDS_A_CKP
sht5 LVDS_A_CKN
CDCLVD2102
> LVDS_2... 2nd port, P4
(PWM digital signal)
U4
sht5 LVDS_BKLT_CTRL
IN
en
Y0
gnd
Y1
nc1
Vdd
nc
CDCLVC1102
5 Ohms, 1% R20
LVDS_2_BKLT_CTRL
+3V3_PANEL
0.10uF C19
+3V3_PANEL
U15
in
gnd
en
out
nc
TPS79925DDCR
C22
0.10uF
C23
10uF
2.5Vcc
C16
10uF
5 Ohms, 1% R21
LVDS_1_BKLT_CTRL
OK values?
100-ohm R-term, ref: CDCLVD2102, pg 11
R-series, ref CDCLVC1108, pg 12
2nd LVDS
VIDEO PORT
LVDS_2..
+3V3_PANEL
C20
100uF
R15
10.0 K
SI9933CDY-T1-GE3
Q3B
100 Ohms, 1%
R16
LVDS_VDD_EN
Q5
BCR 521 E6327
C21
10uF
LVDS_3V3_B
600-ohm @100MHz
C41
0.22uF
L18
C42
0.22uF
LVDS_VCC_2
P4
R18
100 K
LVDS_2_BKLT_CTRL
LVDS_2A_CKN
LVDS_2A_CKP
LVDS_2A0N
LVDS_2A0P
LVDS_2A1N
LVDS_2A1P
LVDS_2A2N
LVDS_2A2P
DF13A-30DP-1.25V(55)