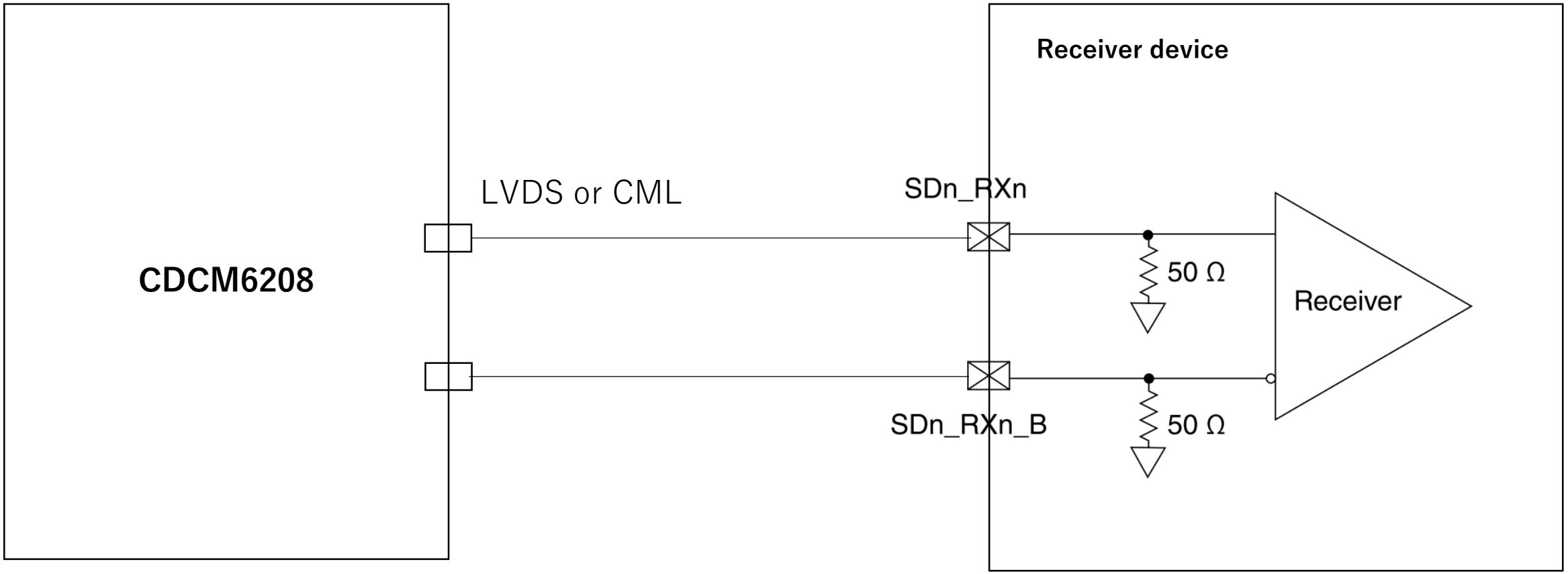
Receiver device
LVDS or CML
SDn_RXn
CDCM6208
50 Ω
Receiver
SDn_RXn_B
50 Ω