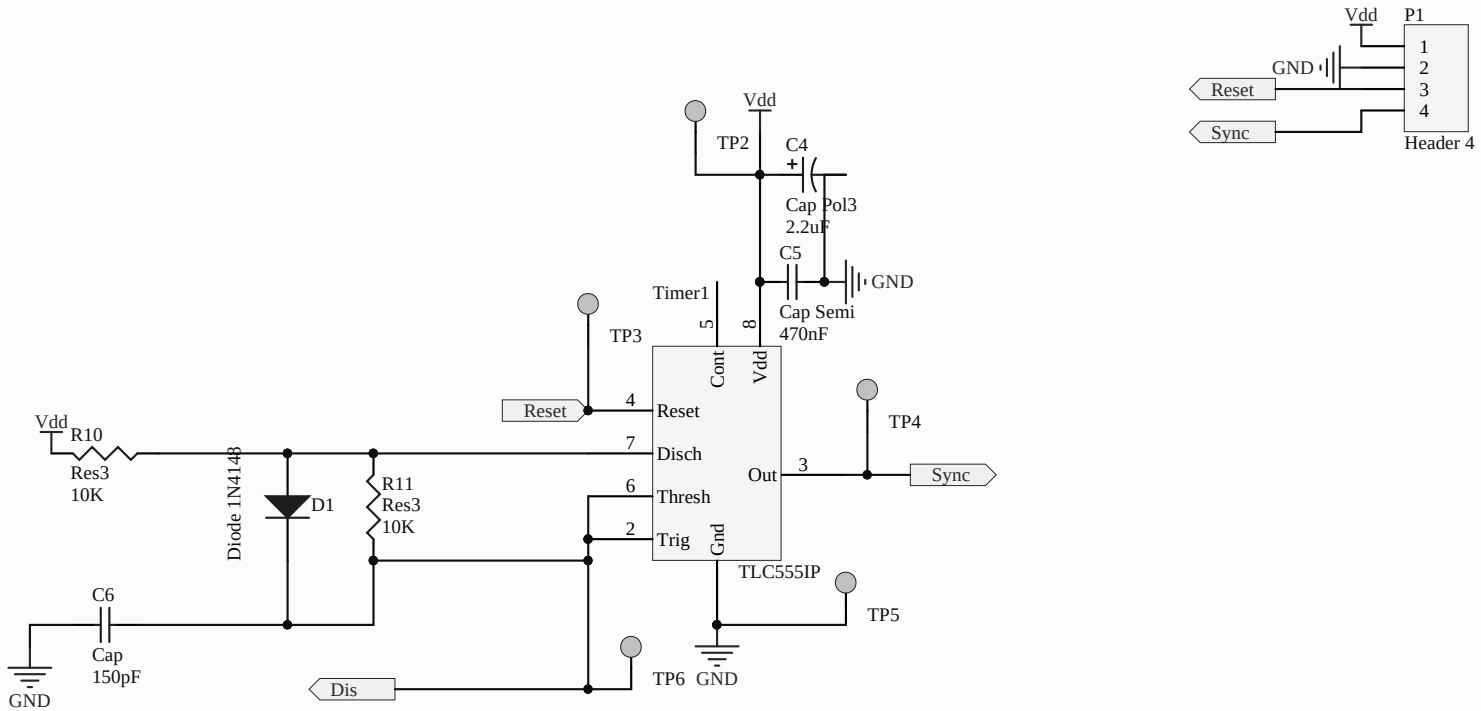

Title		
Size A	Number	Revision
Date: 10/1/2018	Sheet of	
File: D:\alteum projects\..\Timer.SchDoc	Drawn By:	