*** : Not Install parts
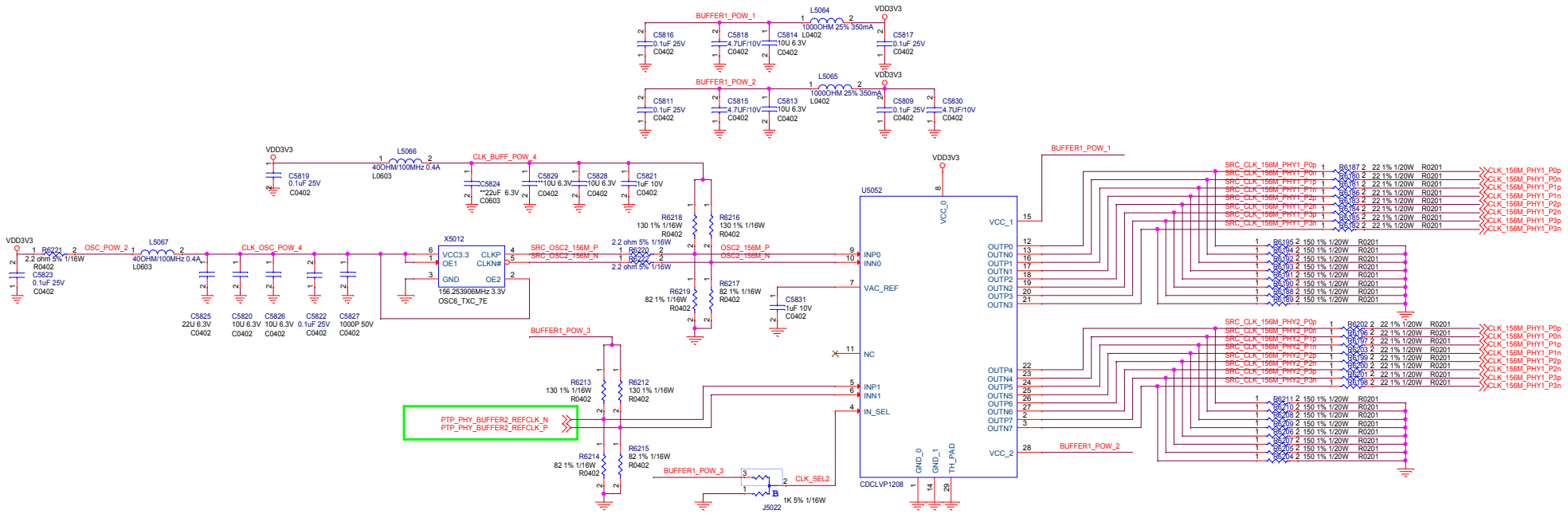
: Jumper Pad Select 1-2 or 2-3