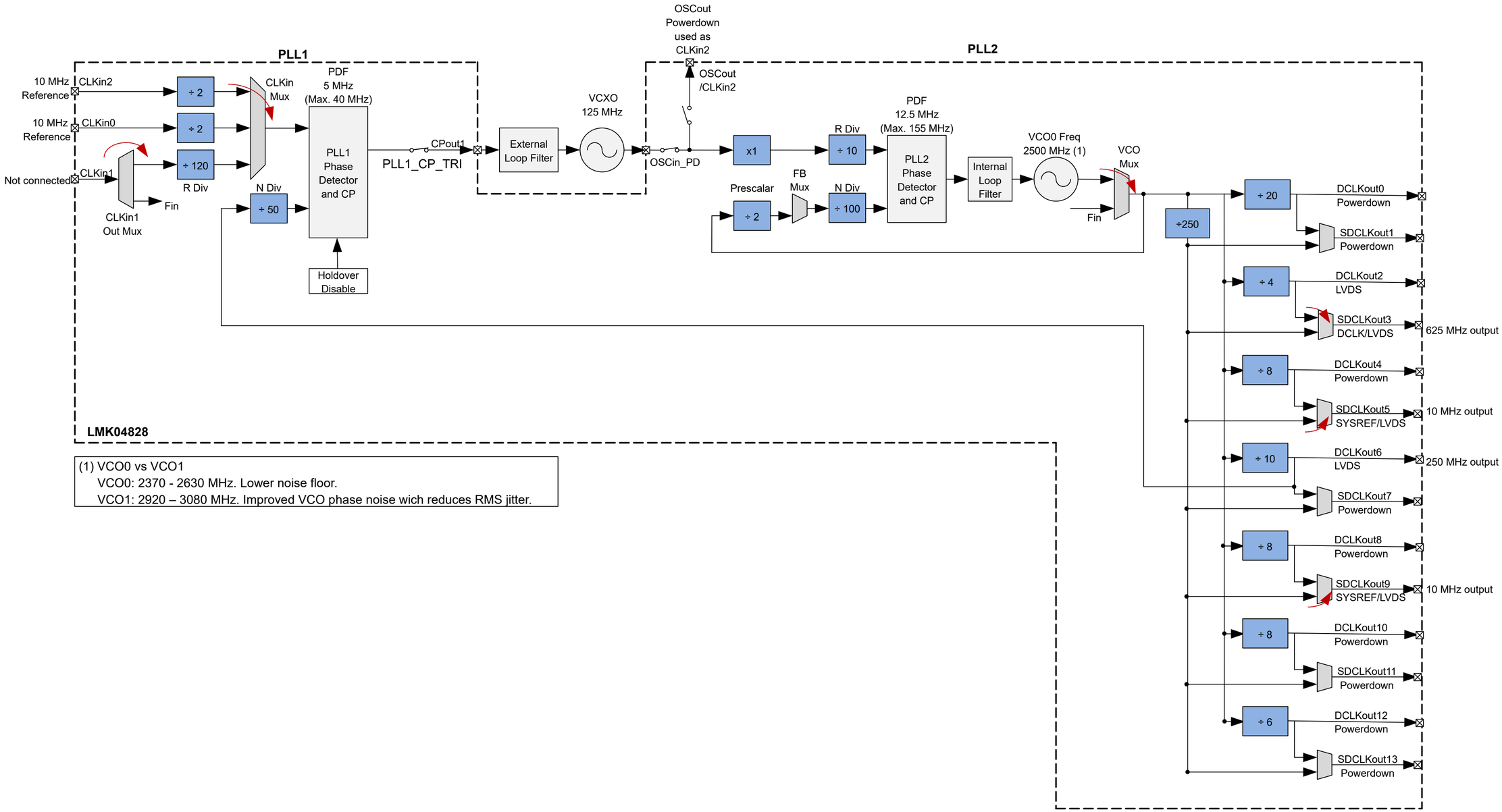

(1) VCO0 vs VCO1
VCO0: 2370 - 2630 MHz. Lower noise floor.
VCO1: 2920 – 3080 MHz. Improved VCO phase noise wich reduces RMS jitter.