Clock Buffer

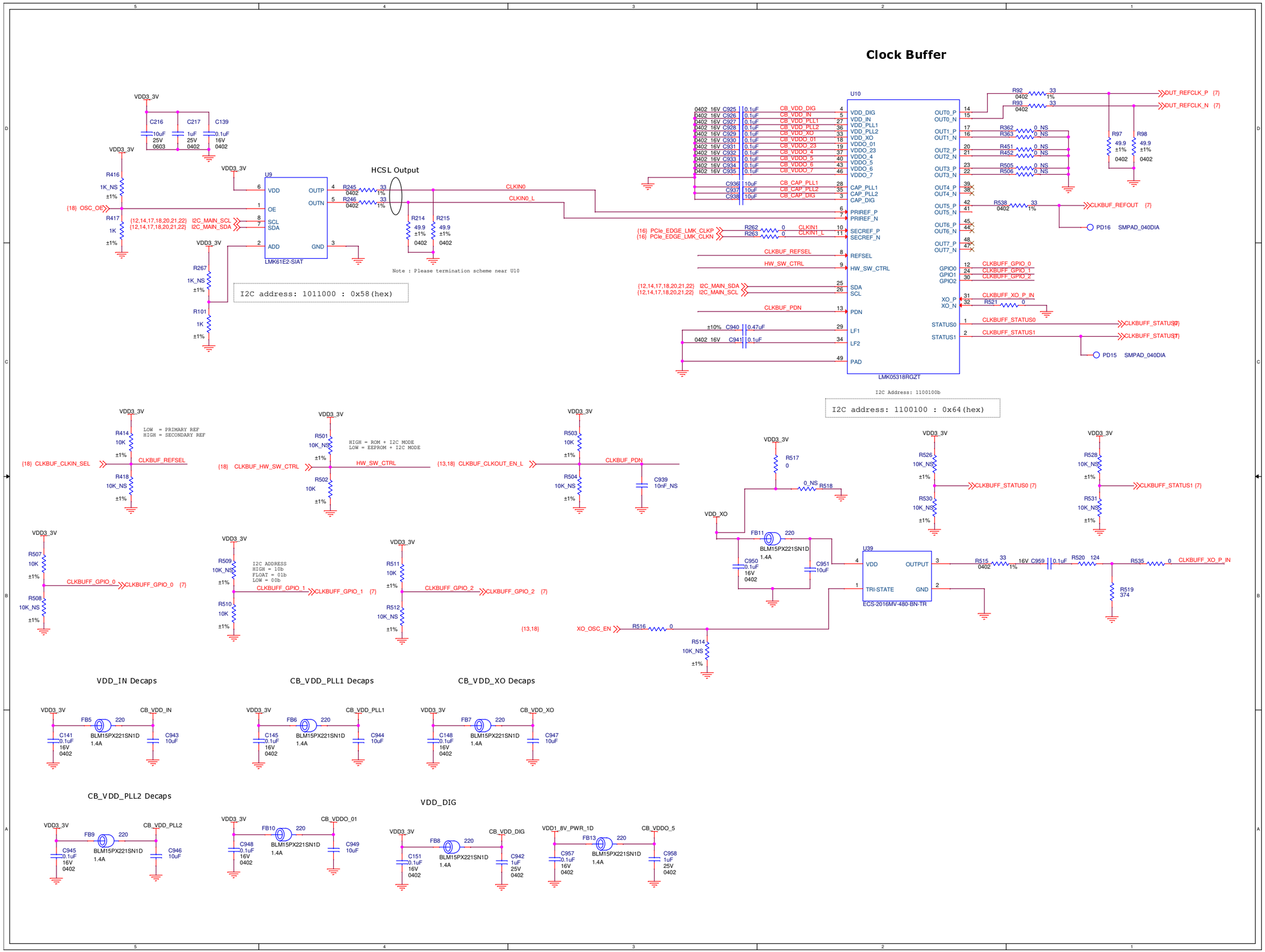

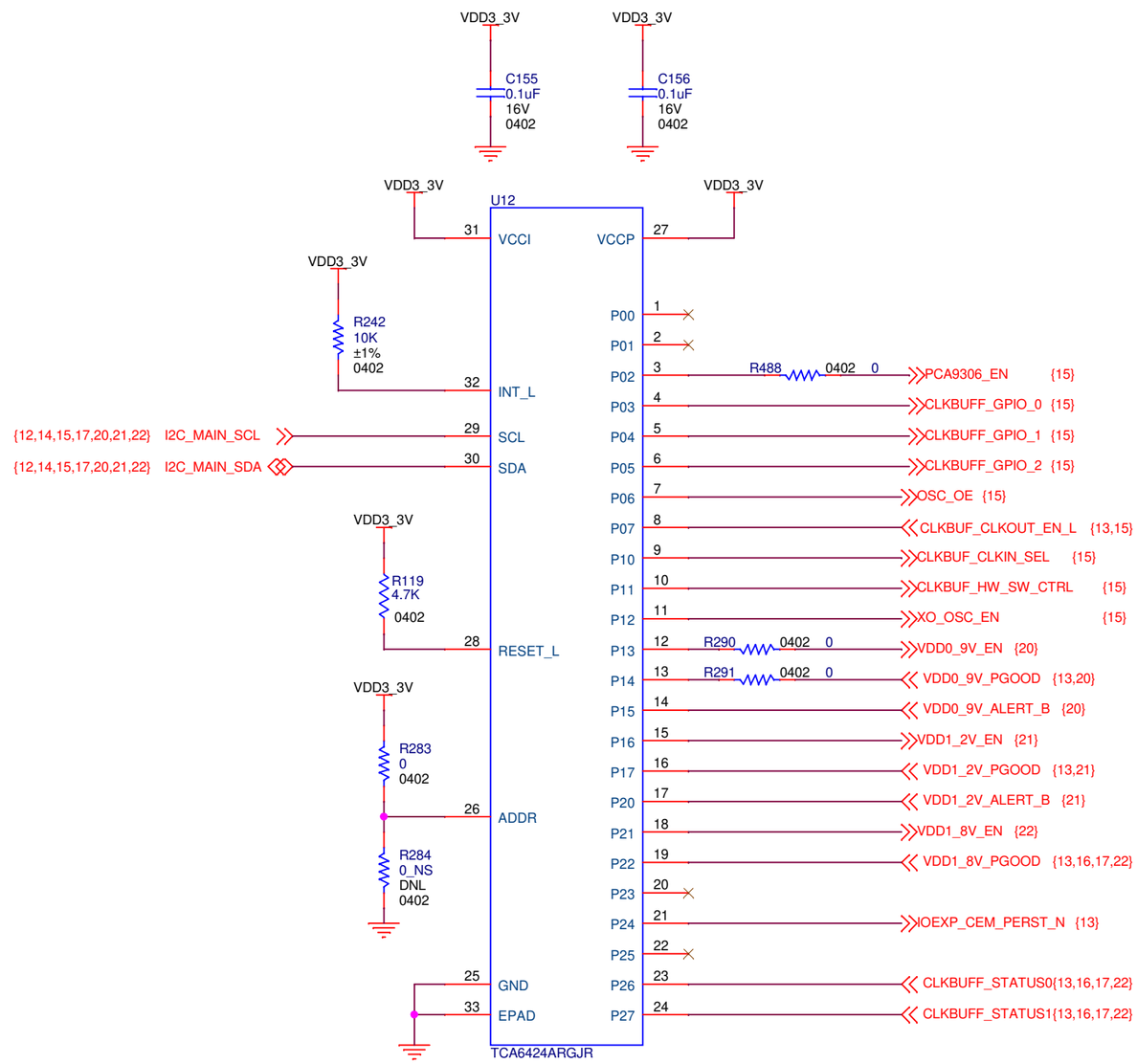

I2C address: 100011 : 0x23(hex)