BLE DIGITAL KEY

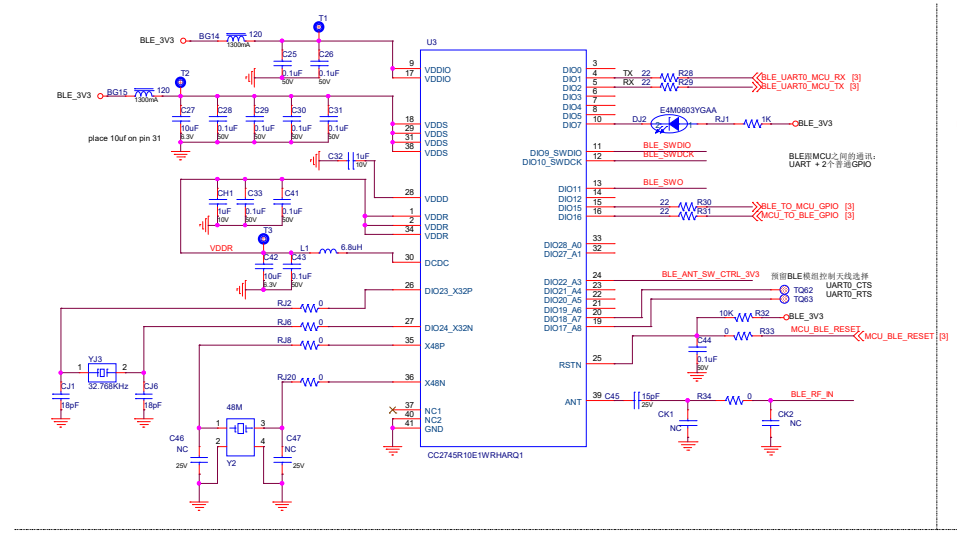

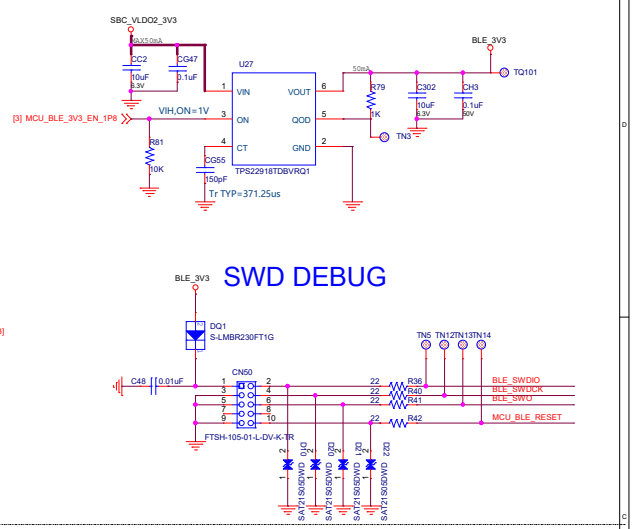

SWD DEBUG

3V3 POWER

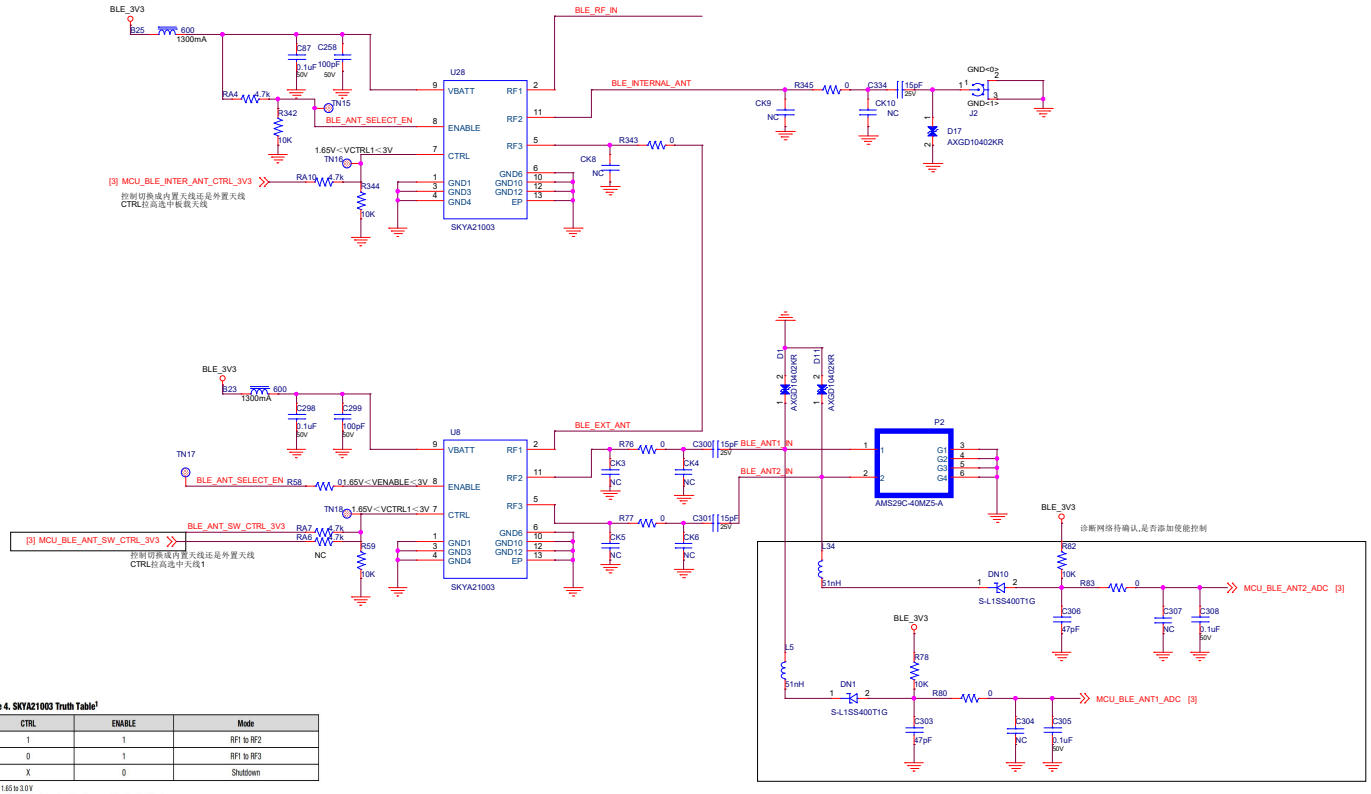

Table 4. SKYA21003 Truth Table[1]

CTRL	ENABLE	Mode
1	1	RF1 to RF2
0	1	RF1 to RF3
X	0	Shutdown

[1] 1 = 1.65 to 3.0 V
0 = <0 to 0.4 V (control and enable voltages must be ≤Vno at all times)
X = don't care
Any state other than described in this Table places the switch into an undefined state. An undefined state will not damage the device.

<Variant Name>

MEGATRONIX DESIGN CONFIDENTIAL

MEGATRONIX	Function: Chery_8155_TBOX		
Size: Custom	Document Number: 10_BLE_DIGITAL	Modified by: <ModifiedBy>	Rev: A
Date: Thursday, October 23, 2025		Sheet 11 of 22	