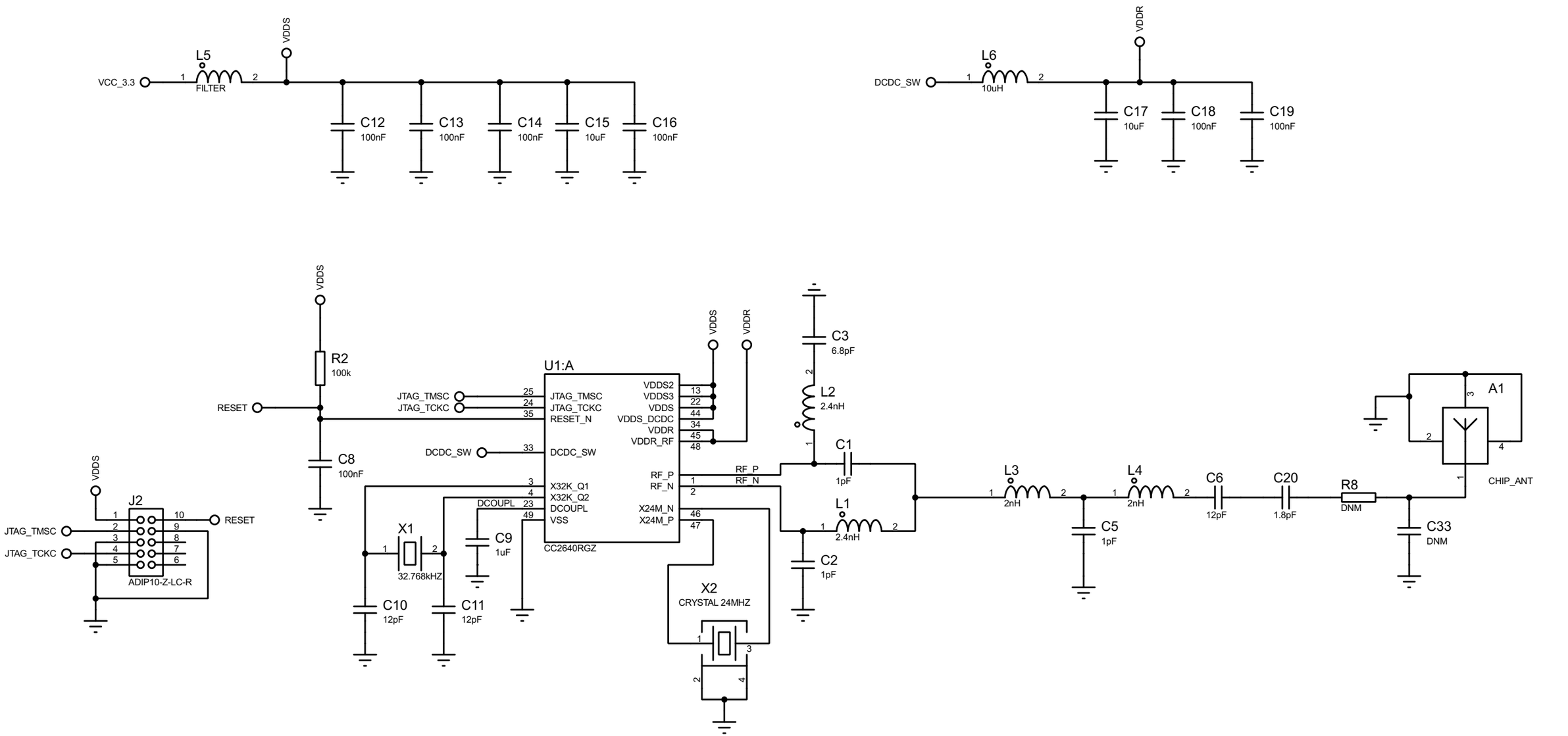

FILE NAME: CAN_BTDongle.pdsprj	DATE: 5/30/2018
DESIGN TITLE: CAN_BTDongle.pdsprj	PAGE: 1 of 3
PATH: D:\Ajith\svn\CAN_BTDongle\Trunk\Hardware\Proteus project\CAN_B	
BY: @AUTHOR REV: @REV	TIME: 7:26:34 PM