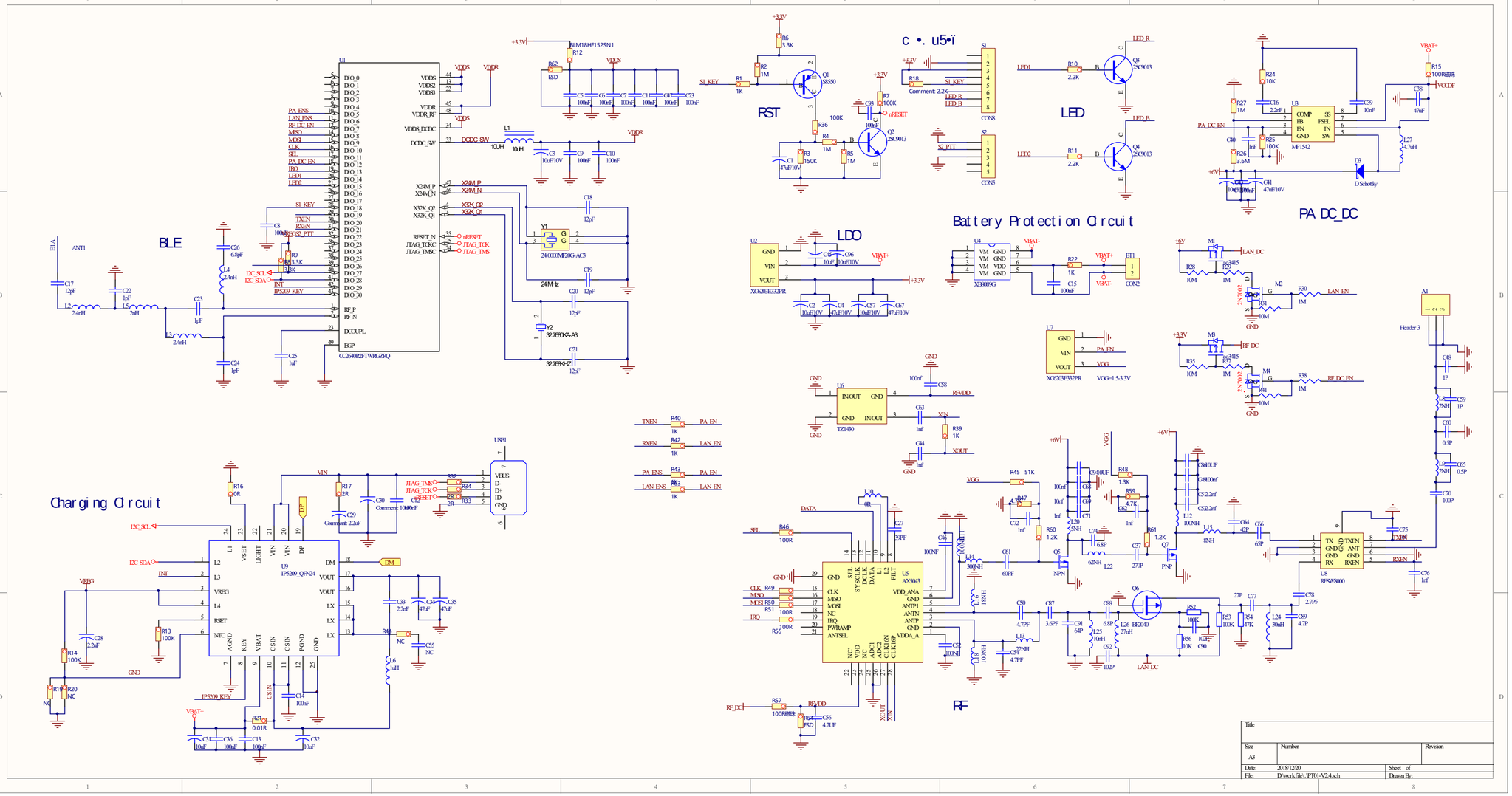
BLE
RST
LED
Battery Protection Circuit
PA DC_DC
LDO
Charging Circuit
RF
U1
CC2640R2F1WRGZRQ
U9
IP5209_QFN24
U5
AX5043
U8
RFSW8000
U3
MP1582
U2
XC6203E332PR
U4
XB8089G
U7
XC6203E332PR
U6
TZ1430
Q1
S8550
Q2
2SC9013
Q3
2SC9013
Q4
2SC9013
Q5
NPN
Q6
BF2040
Q7
PNP
M2
2N7002
M4
2N7002
D3
Schottky
Y1
24.0000MF20G-AC3
Y2
32.768KHZ
USB1
A1
Header 3
S1
CON8
S2
CON5
BT1
CON2
ANT1
Comment: 2.2uF
Comment: 10uF
Comment: 2.2uF
Comment: 2.2uF
Comment: 2.2