Page 7, supposed to be top view and coherent with the samacsys footprint:

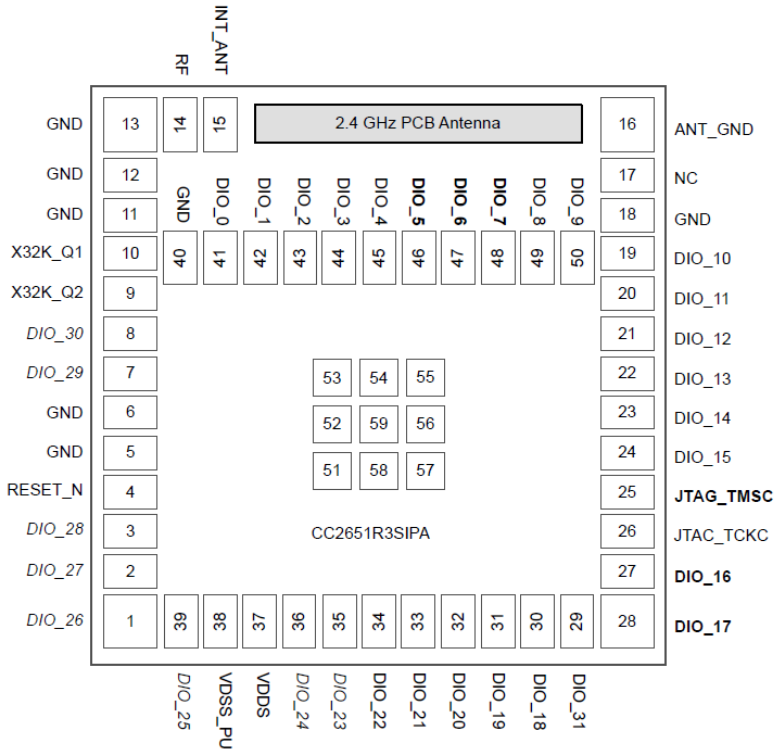

Figure 7-1. MOU (7-mm × 7-mm) Pinout, 0.5-mm Pitch (Top View)

Page 50. Supposed to be top view (mirrored from page 7):

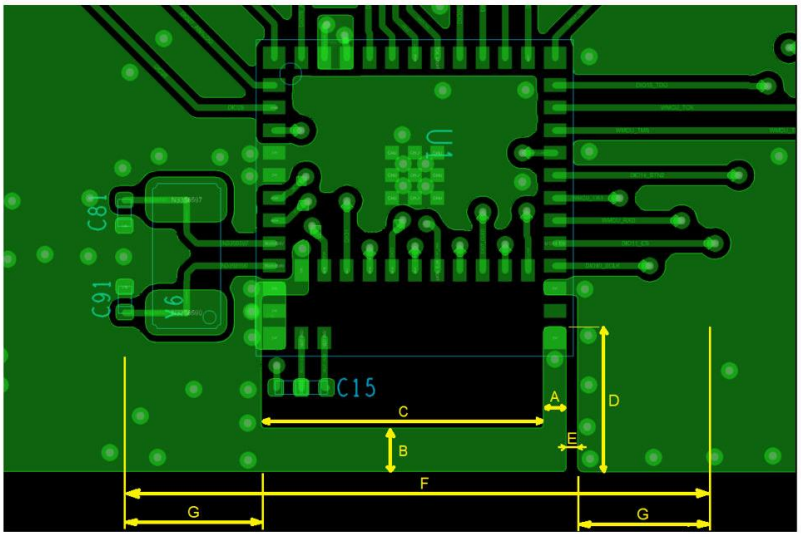

Page 65. Supposed to be bottom view (coherent with page 50):

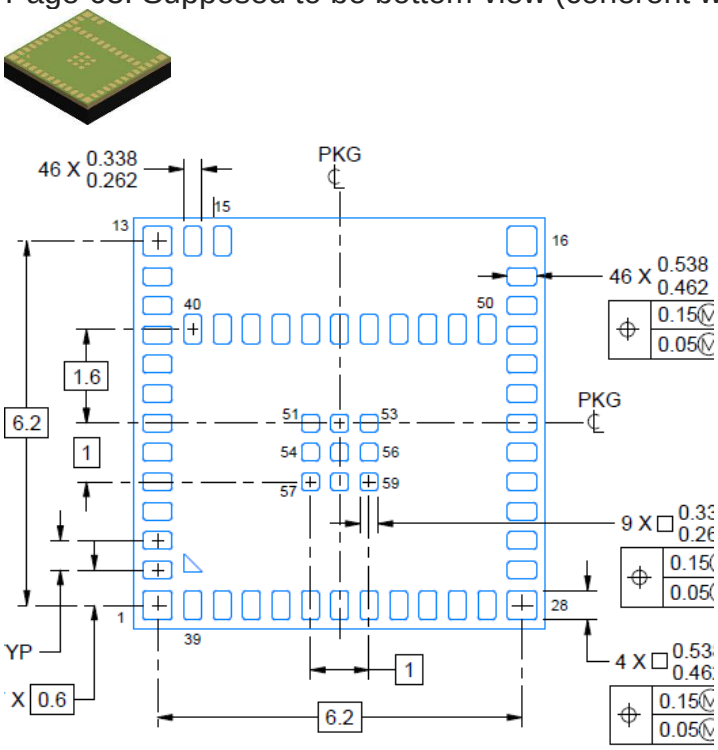

Page 66. Supposed to be TOP view (coherent with pages 50, 65 and 67 - Mirrored from page 7):

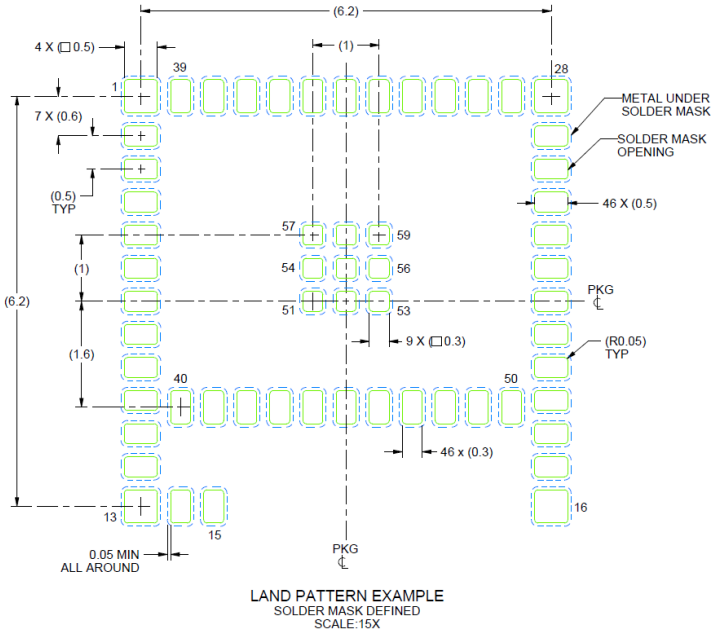

Thank you for your attention.

Diego Loss