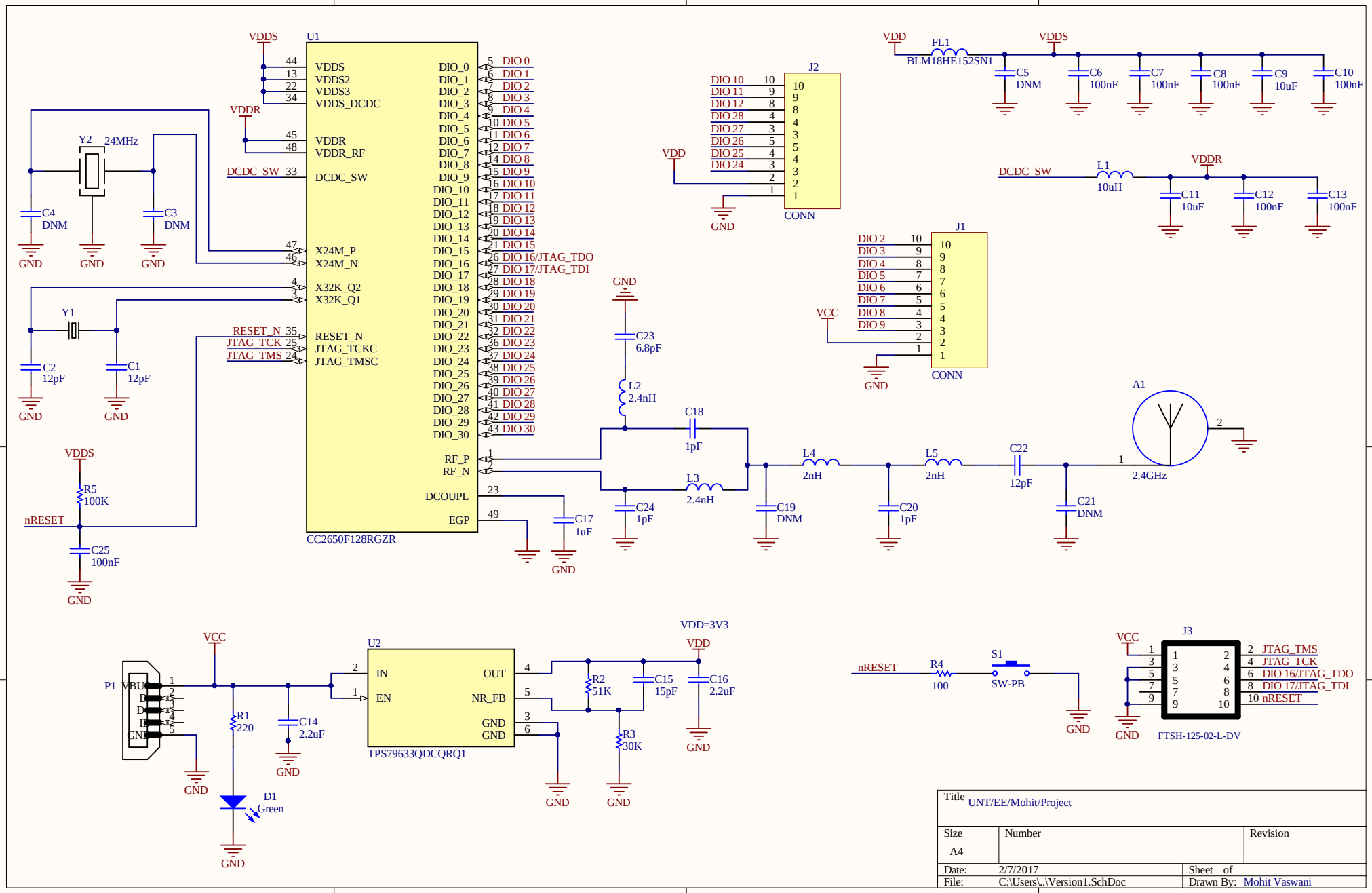

Title	UNT/EE/Mohit/Project	
Size A4	Number	Revision
Date: 2/7/2017		Sheet of
File: C:\Users\..\Version1.SchDoc		Drawn By: Mohit Vaswani