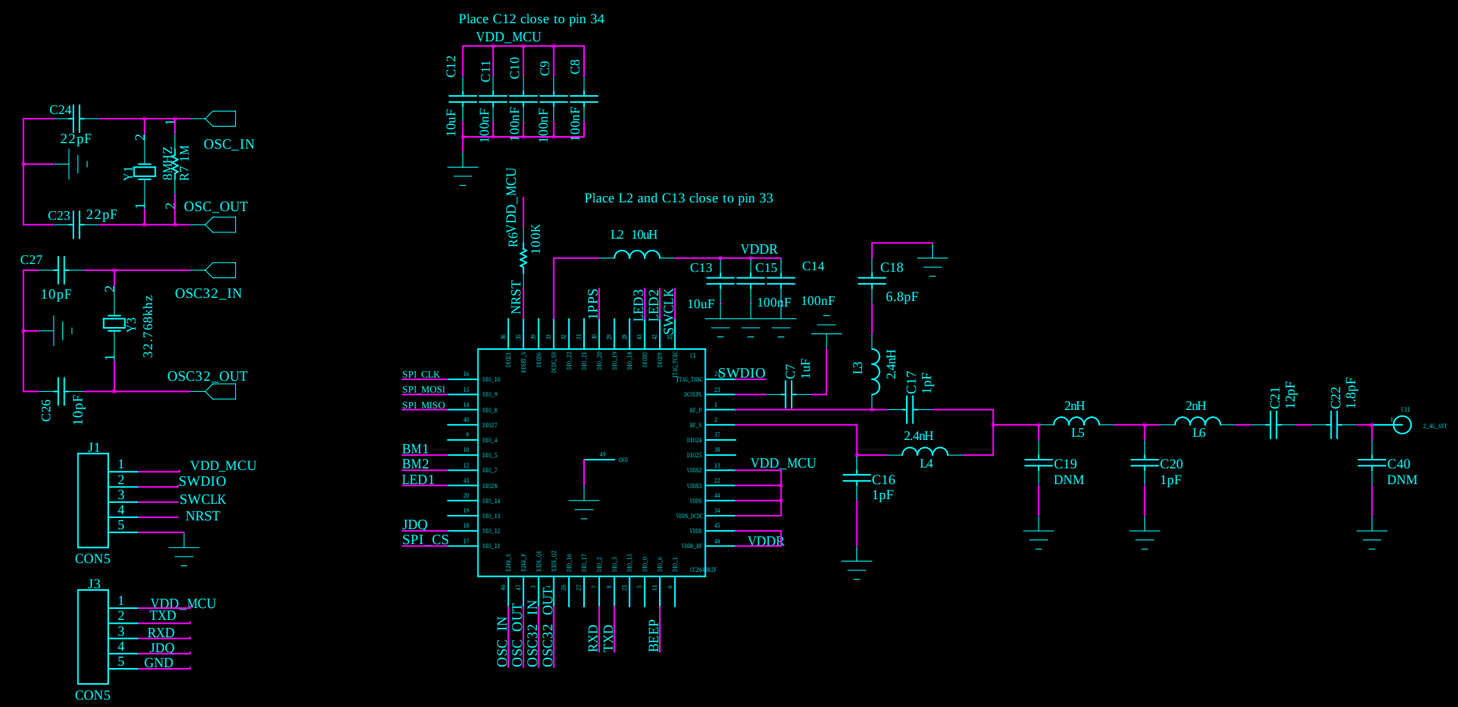
Place C12 close to pin 34
VDD_MCU
C12
C11
C10
C9
C8
10uF
100nF
100nF
100nF
100nF
Place L2 and C13 close to pin 33
R6
VDD_MCU
100K
L2 10uH
VDDR
C13
C15
C14
10uF
100nF
100nF
C18
6.8pF
NRST
1PPS
LED3
LED2
SWCLK
SWDIO
C7
1uF
L3
2.4nH
C17
1pF
2.4nH
L4
C16
1pF
VDD_MCU
VDDR
SPI_CLK
SPI_MOSI
SPI_MISO
BM1
BM2
LED1
JDO
SPI_CS
OSC_IN
OSC_OUT
OSC32_IN
OSC32_OUT
RXD
TXD
BEEP
2nH
L5
2nH
L6
C21
12pF
C22
1.8pF
C19
DNM
C20
1pF
C40
DNM
C24
22pF
Y1
8MHZ
R7
1M
OSC_IN
C23
22pF
OSC_OUT
C27
10pF
Y3
32.768khz
OSC32_IN
OSC32_OUT
C26
10pF
J1
1 VDD_MCU
2 SWDIO
3 SWCLK
4 NRST
5
CON5
J3
1 VDD_MCU
2 TXD
3 RXD
4 JDO
5 GND
CON5