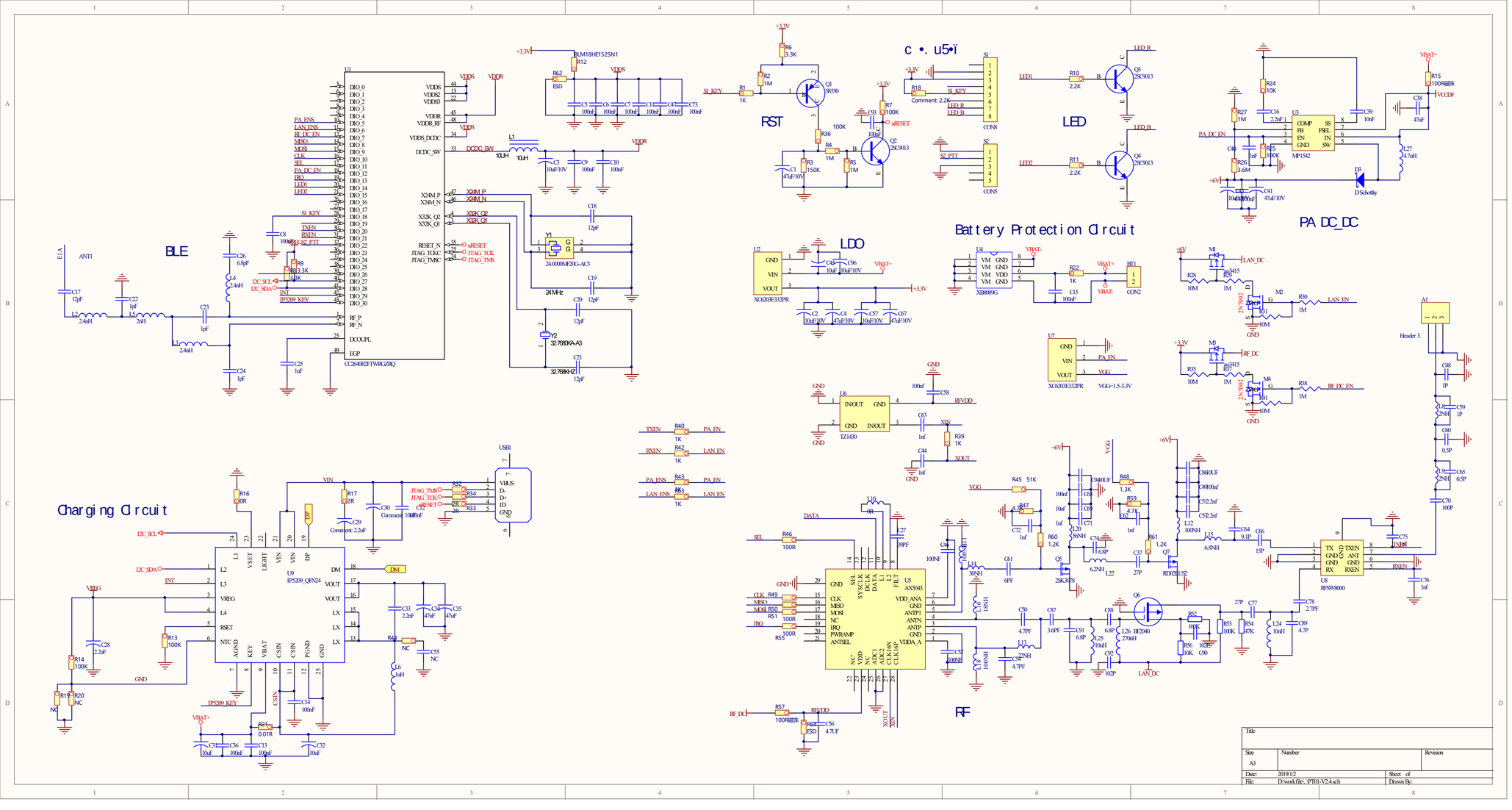

BLE
RST
LED
PA DC_DC
LDO
Battery Protection Circuit
Charging Circuit
RF
Title
Size
A3
Number
Revision
Date:
2019/1/2
Sheet of
File:
D:\work\file\..\PT01-V2.4.sch
Drawn By: