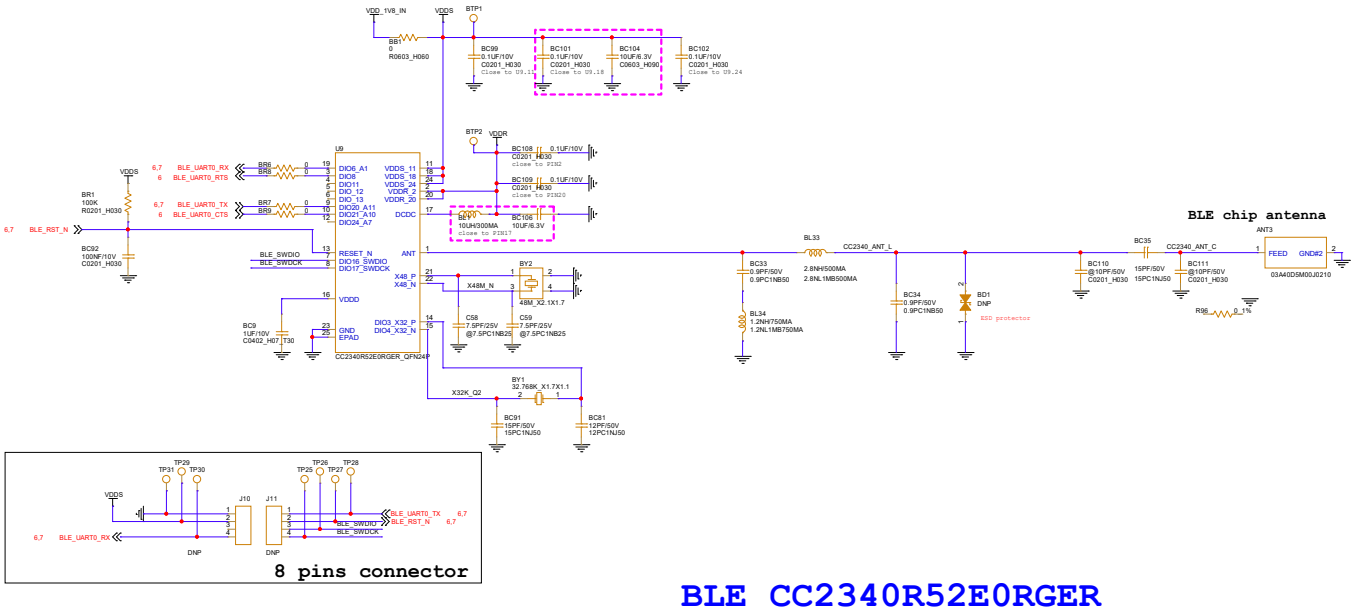

BLE_CC2340R52E0RGER

RD BOM

WNC Proprietary & Confidential

Title	BLE_CC2340R52E0RGER			
Size C	Model Name Tracker	Part Number <Part Number>	Author Ben	Rev SGA
Date: Friday, December 08, 2023		Sheet 7 of 7		