AMPLIFIER Max : 9W

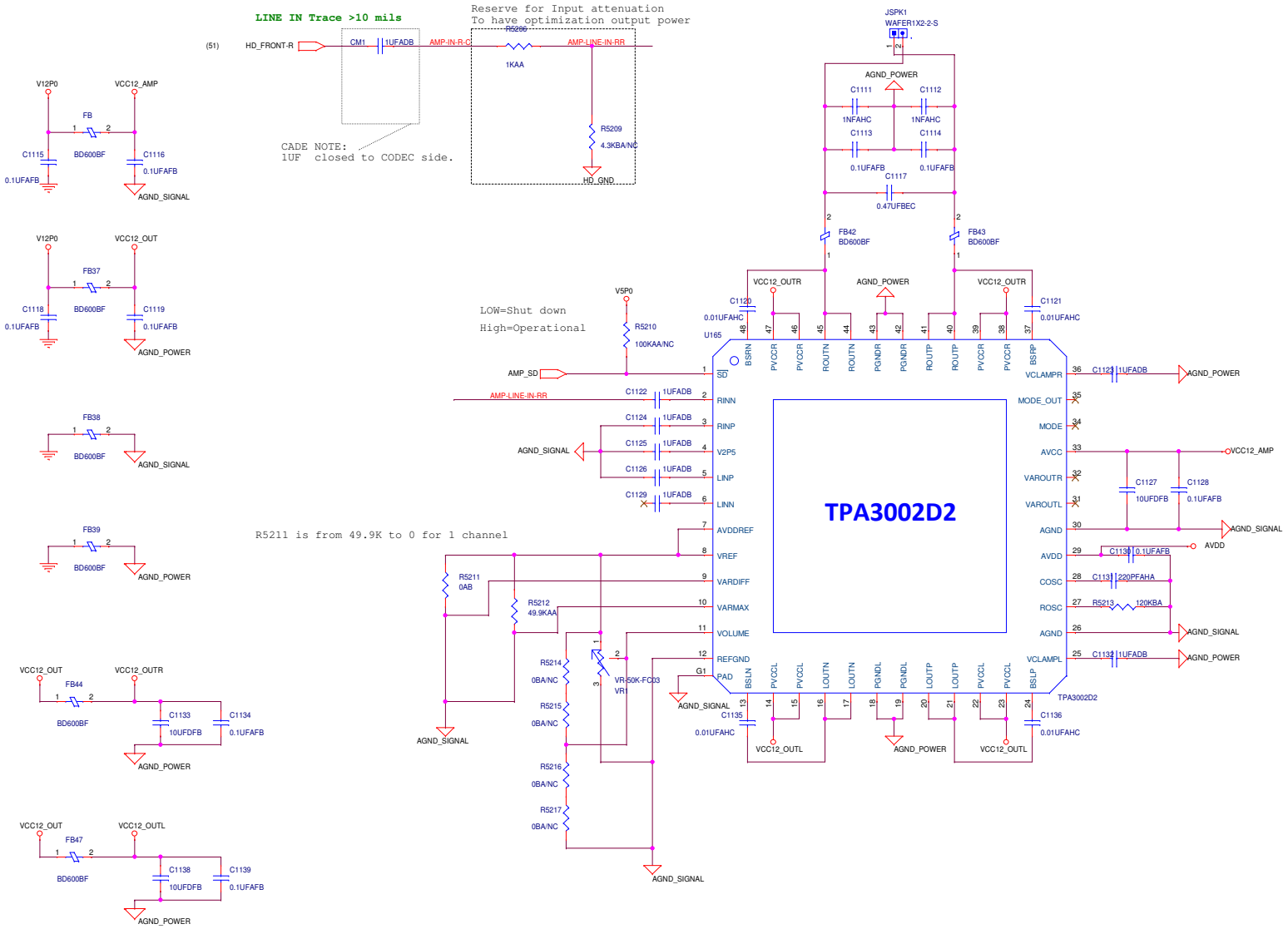

Prox 南京資訊(股)公司
Protech Systems Co., Ltd.

Title	AMPLIFIER	
Size C	Document Number SB-N207R1	Rev C0D
Date: Wednesday, December 26, 2018	Sheet 52 of 84	