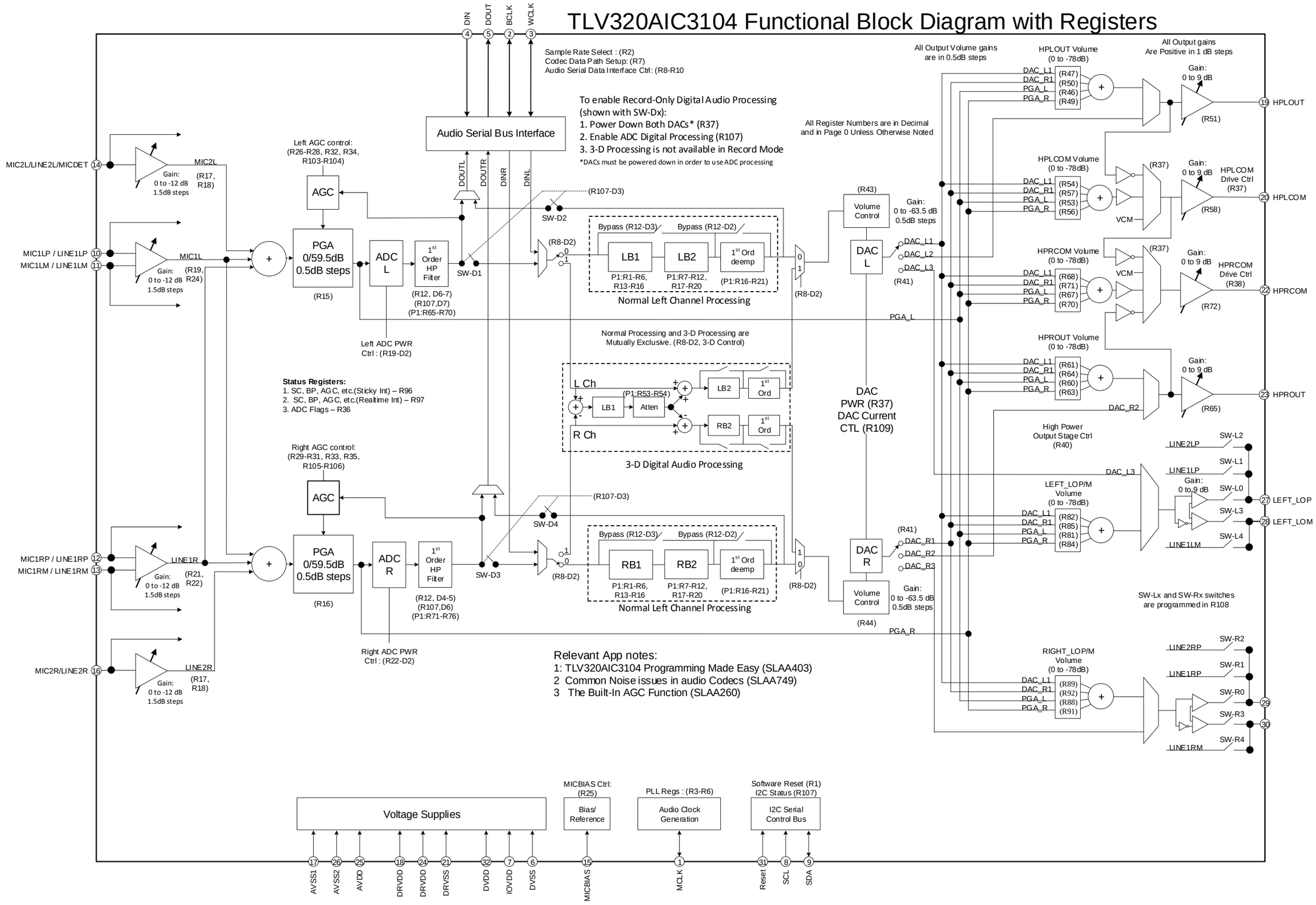TLV320AIC3104 Functional Block Diagram with Registers