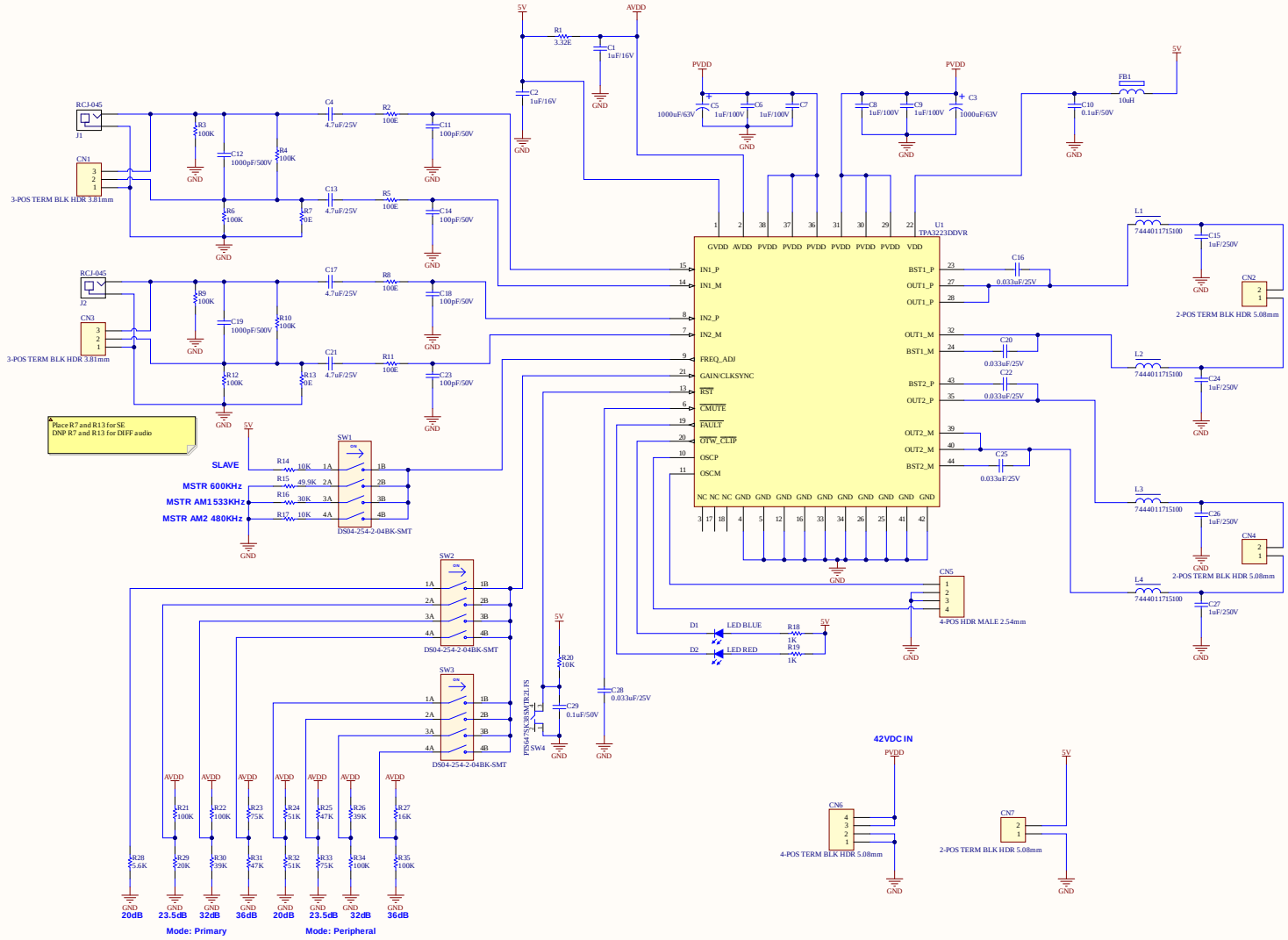

TITLE:		
SIZE A2	NUMBER	REVISION
DATE: 10/1/2024		DRAWN BY:
FILE: TPA3223.SchDoc		