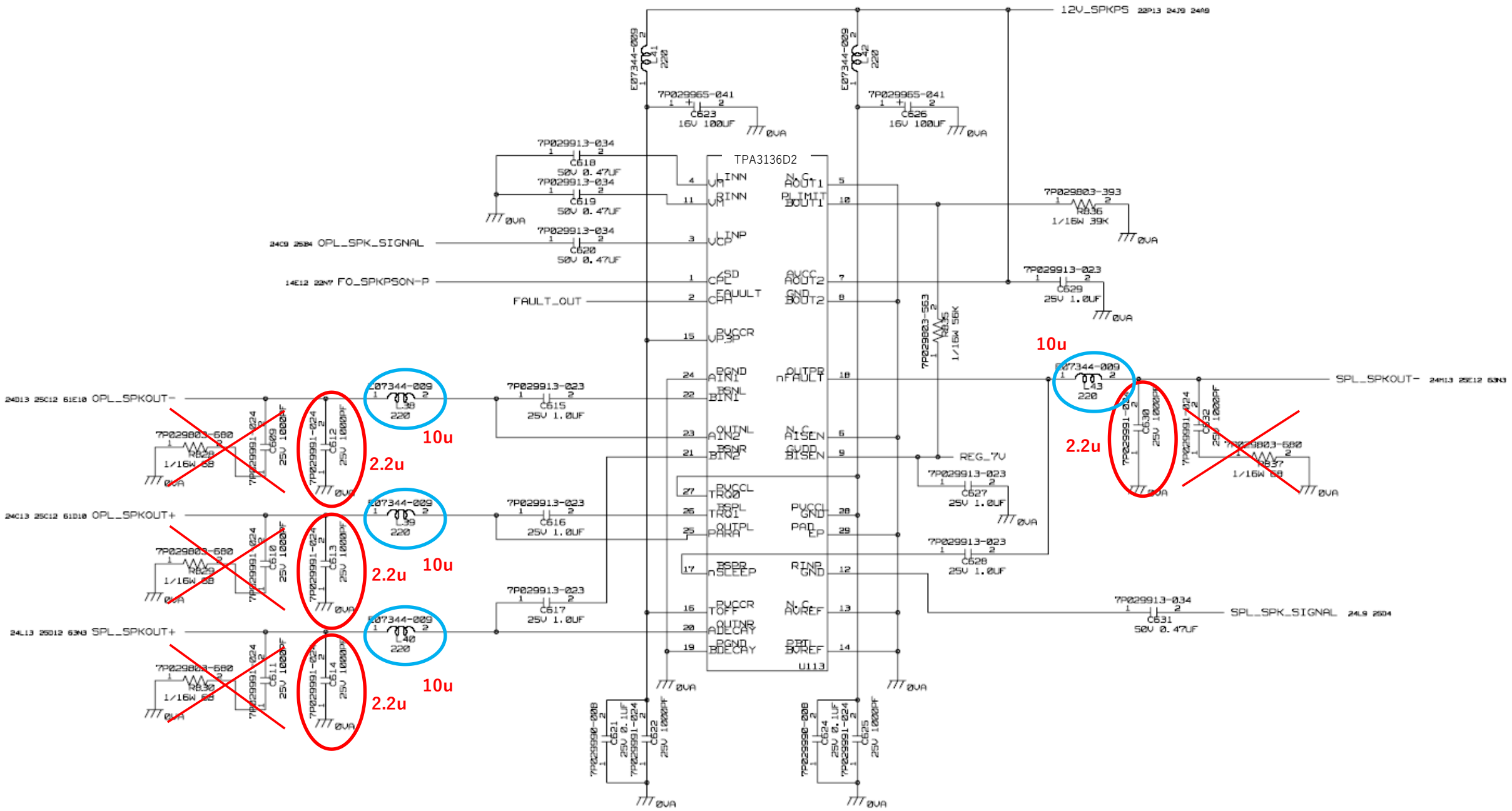
12V_SPKPS
TPA3136D2
U113
OPL_SPK_SIGNAL
FO_SPKPSON-P
FAULT_OUT
OPL_SPKOUT-
OPL_SPKOUT+
SPL_SPKOUT+
SPL_SPKOUT-
SPL_SPK_SIGNAL
REG_7V
10u
2.2u