Aduio CODEC

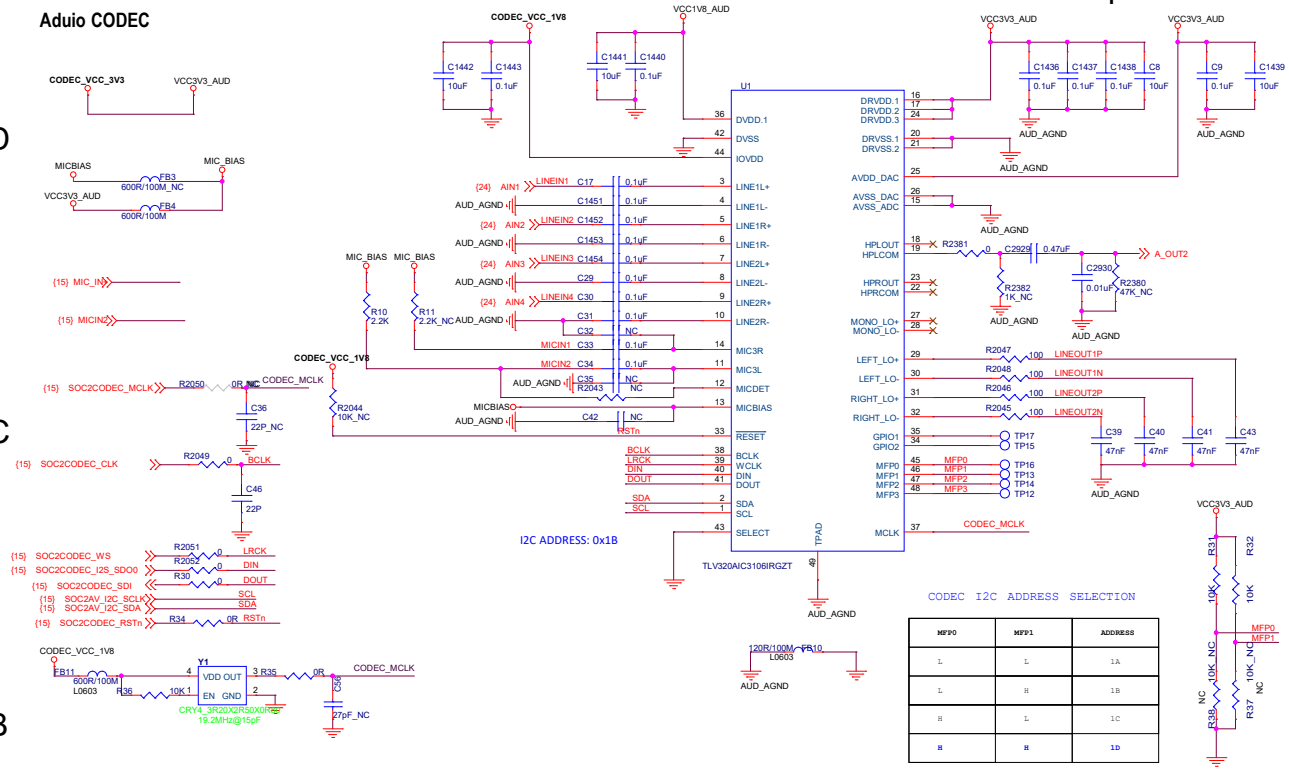

MFP0	MFP1	ADDRESS
L	L	1A
L	H	1B
H	L	1C
H	H	1D

CLASS-D Amplifier

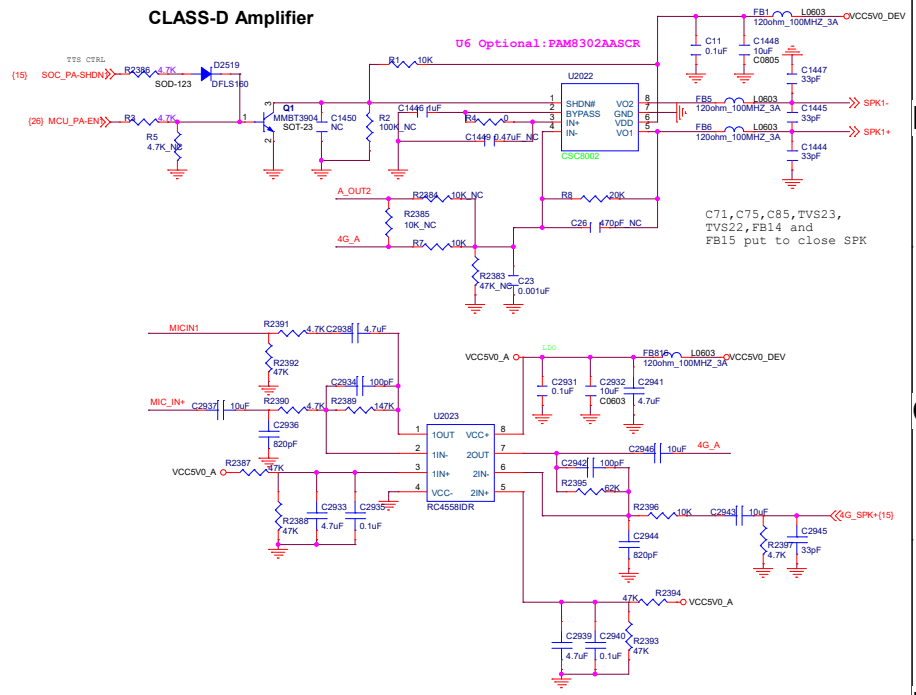

POWER

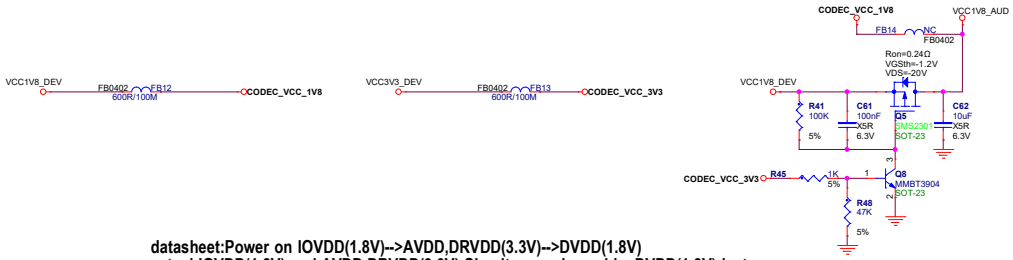

datasheet:Power on IOVDD(1.8V)-->AVDD,DRVDD(3.3V)-->DVDD(1.8V)
actual:IOVDD(1.8V) and AVDD,DRVDD(3.3V) Simultaneously enable, DVDD(1.8V) last

瑞为智能感知	DESIGN COMPANY: RECONOVA
	DESIGNER: DESIGNER
	TITLE: RN-CA-P500-MB
SIZE: Custom	DOC NUMBER: 16.CODEC_Audio / REV: V01
DATE: Wednesday, April 24, 2019	SHEET: 16 of 26