NOTES:

1). ROOM = AUDIO_DSP.
2). THIS PART HAS A PWRDWN INPUT.
3). AUDIO_DSP_CLK COMING FROM A COMMON 12.288 MHz CRYSTAL.

I2C BUS = IMAX53_I2C2

I2C WRITE ADDRESS = 0X40
I2C READ ADDRESS = 0X41

CLK SPEED 100KHz

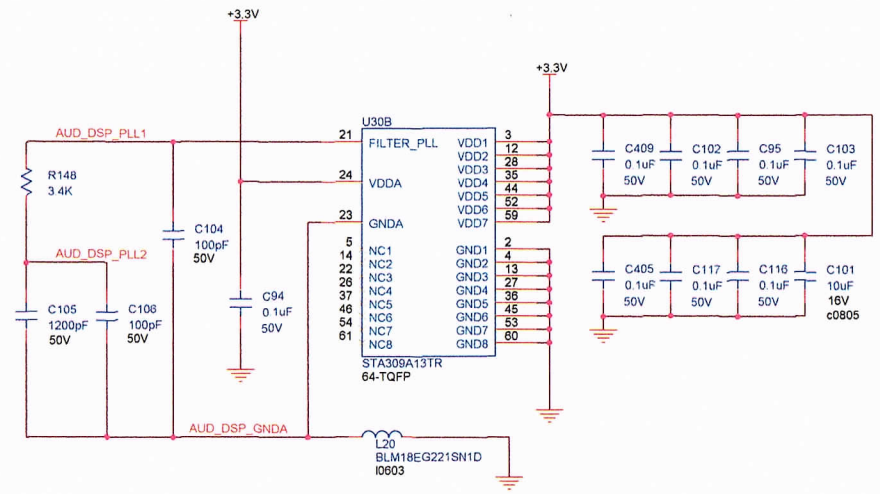


CONSIDER AGND POUR

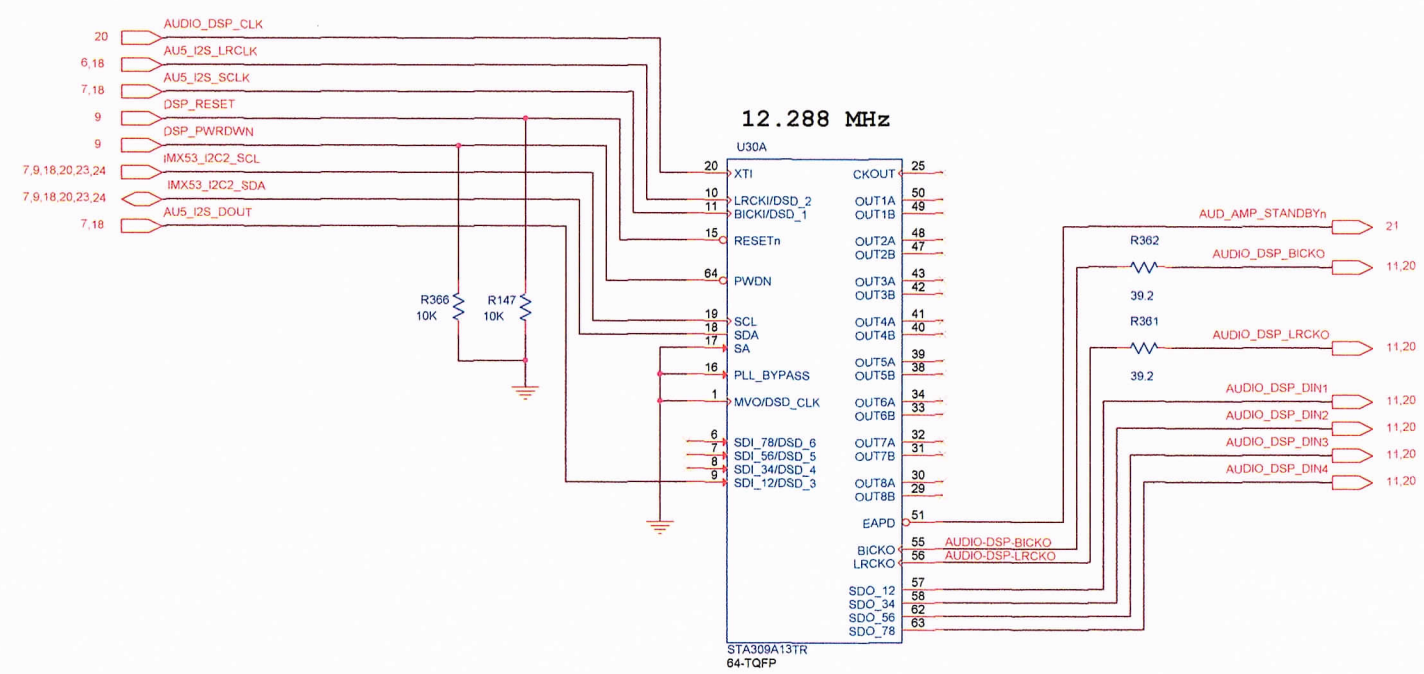


THIS DOCUMENT AND THE INFORMATION CONTAINED HEREIN ARE THE PROPERTY OF QUANTA TECNOLOGIA ELECTRONICA COPIES ARE ISSUED ON STRICT CONFIDENCE AND SHALL NOT BE REPRODUCED, COPIED OR USED AS BASIS FOR MANUFACTURE WITHOUT WRITTEN PERMISSION

5150, SCH MOTHERBOARD, QUANTA TEC QAMC
AUDIO DSP

| SIZE | CAGE CODE | DRAWING NO | REV |
|---|---|---|---|
| C | N/A | 5150 | 100 |

SCALE: N/A



DWG NO. 5150 REV 100

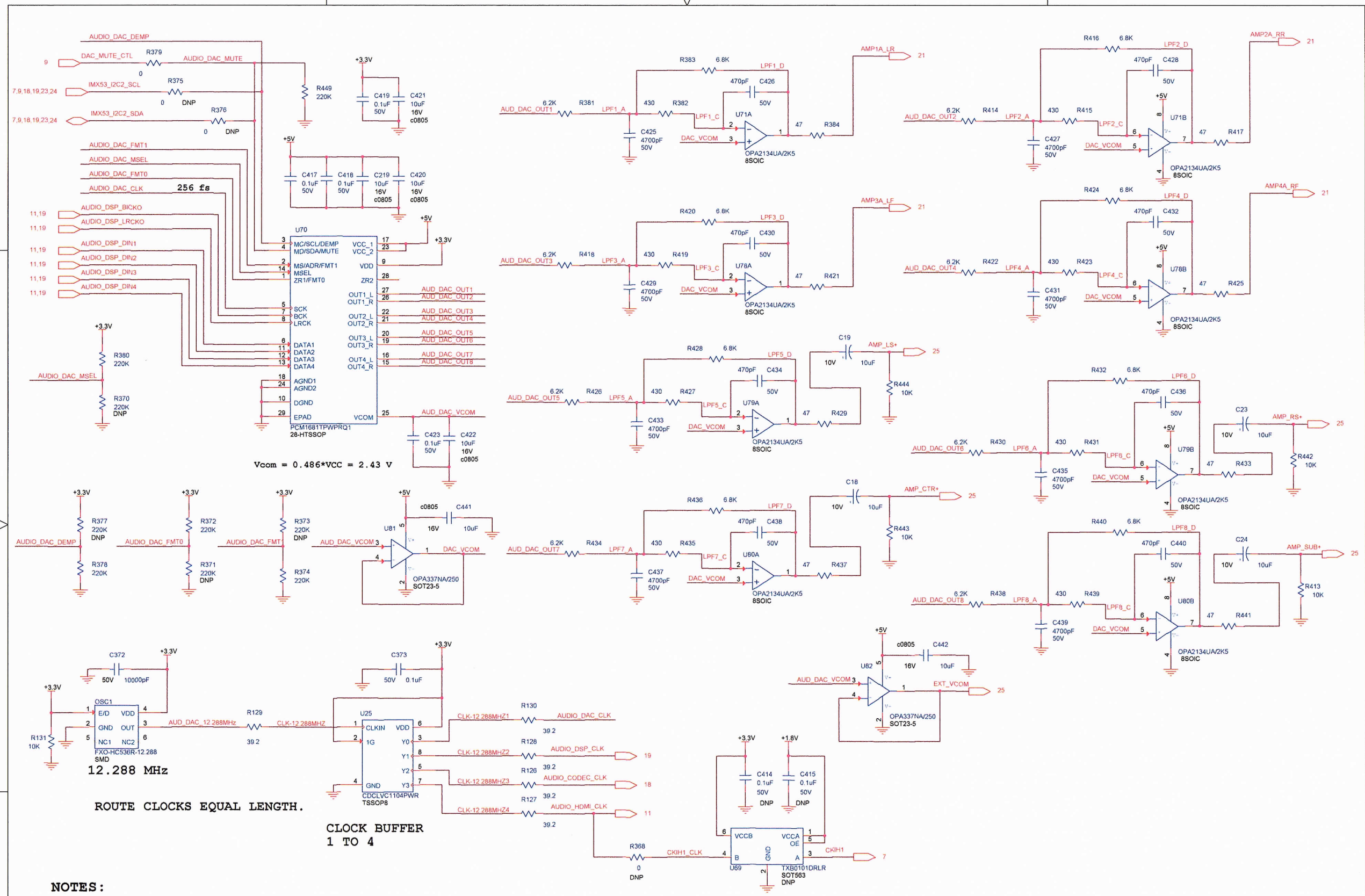


ROUTE CLOCKS EQUAL LENGTH.

CLOCK BUFFER
1 TO 4

NOTES:

1). ROOM = AUDIO_DAC.
2). ADDED CLOCK BUFFER FOR 12.288MHZ. ( 1 TO 4)
3). DAC CONFIGURED FOR 4-WIRE PARALLEL H/W CONTROL.
4). WIDE MODE SAMPLING.
5). EXTERNAL MUTE CONTROL.
6). 16 to 24-bits I2S format.
7). De-emphasis off.

THIS DOCUMENT AND THE INFORMATION CONTAINED HEREIN ARE THE PROPERTY OF QUANTA TECNOLOGIA ELECTRONICA COPIES ARE ISSUED ON STRICT CONFIDENCE AND SHALL NOT BE REPRODUCED, COPIED OR USED AS BASIS FOR MANUFACTURE WITHOUT WRITTEN PERMISSION

5150, SCH MOTHERBOARD, QUANTA TEC QAMC
AUDIO DAC

| SIZE | CAGE CODE | DRAWING NO | REV |
|---|---|---|---|
| C | N/A | 5150 | 100 |

SCALE: N/A



DWG NO. 5150 REV 100

NOTES:

1). ROOM = AUDIO_AMP.
2). NEED TO DETERMINE IF AUDIO INPUT FILTER IS CORRECT.
3). 28W/CH INTO 4 OHM @14.4V.

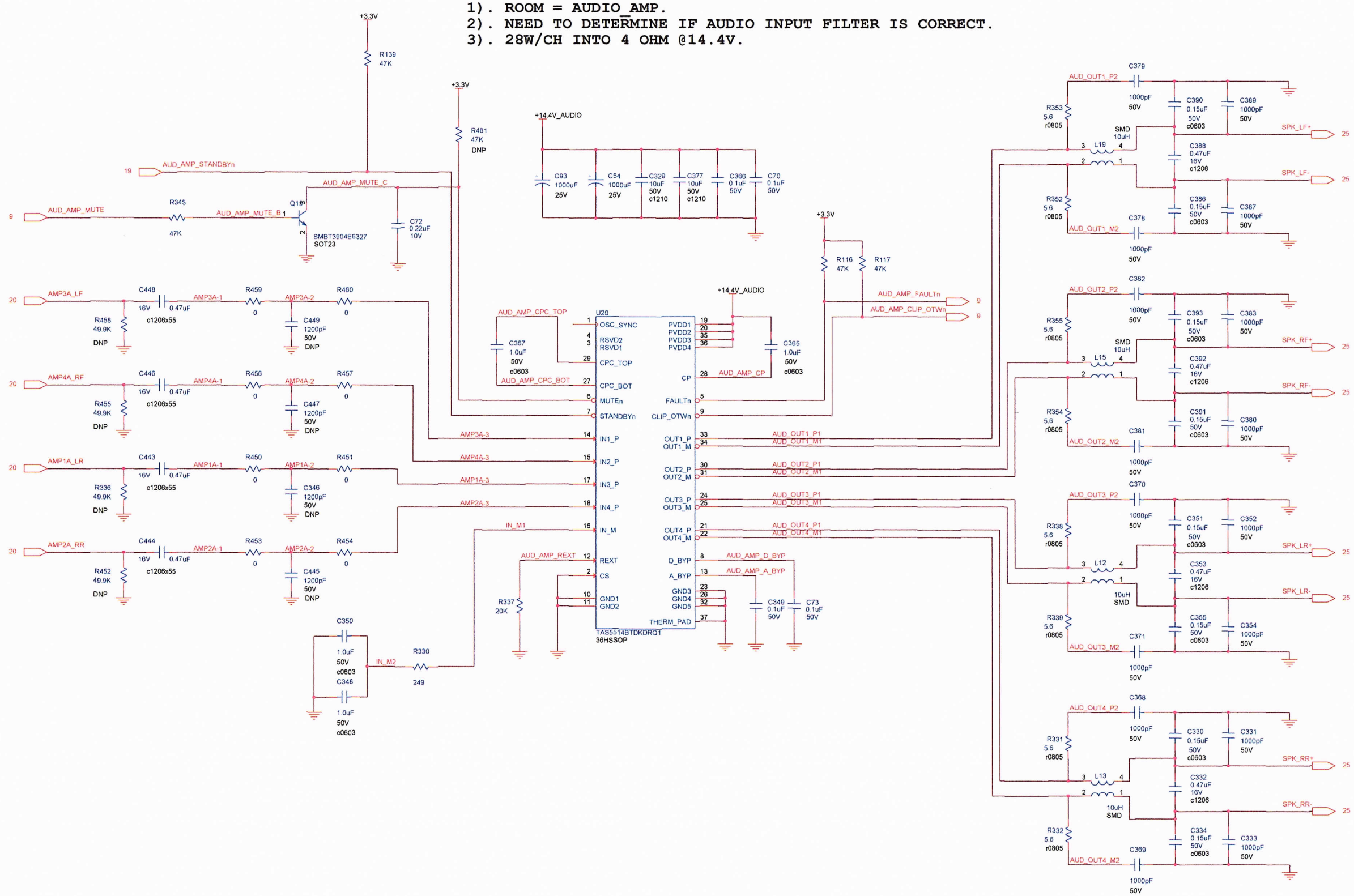


THIS DOCUMENT AND THE INFORMATION CONTAINED HEREIN ARE THE PROPERTY OF QUANTA TECNOLOGIA ELECTRONICA COPIES ARE ISSUED ON STRICT CONFIDENCE AND SHALL NOT BE REPRODUCED, COPIED OR USED AS BASIS FOR MANUFACTURE WITHOUT WRITTEN PERMISSION

5150, SCH MOTHERBOARD, QUANTA TEC QAMC
AUDIO AMPLIFIER

| SIZE | CAGE CODE | DRAWING NO | REV |
|---|---|---|---|
| C | N/A | 5150 | 100 |
| SCALE: N/A | | SHEET 21 OF 35 | |

DWG NO. 5150 REV 100

NOTES:

1). ROOM = REAR_CONN.
2). PIN ASSIGNMENTS CAN BE CHANGED FOR ROUTING PURPOSES.
3). GND REFERENCE FOR EXTERNAL VIDEO AND AUDIO MUST BE TIED TO GND. (REDUCE IMPEDANCE)

AC COUPLING LOCATED AT
AUDIO AMPLIFIER.

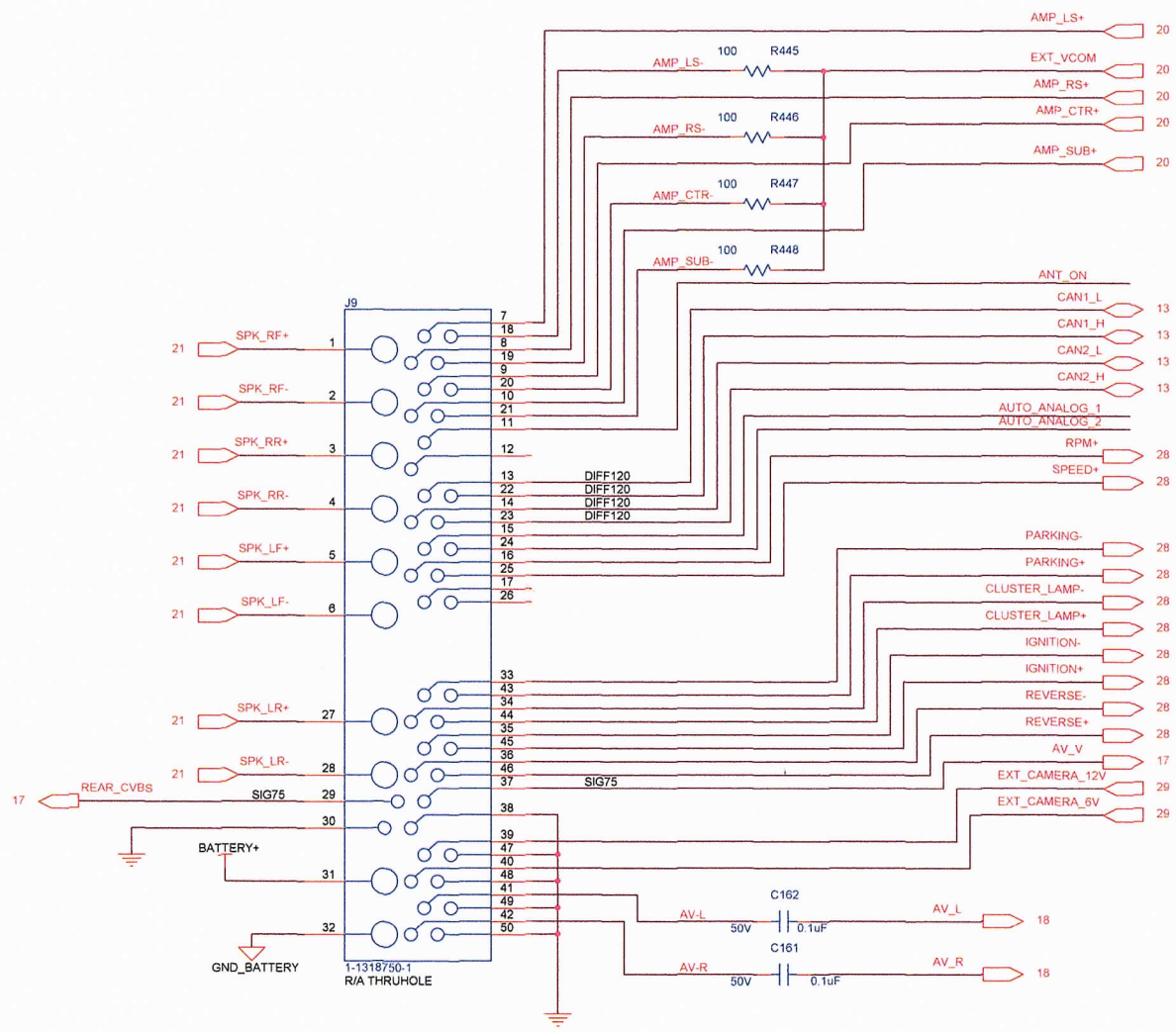


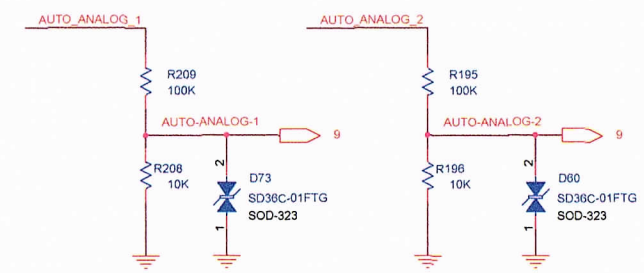


GROUND REFERENCE CONCERN

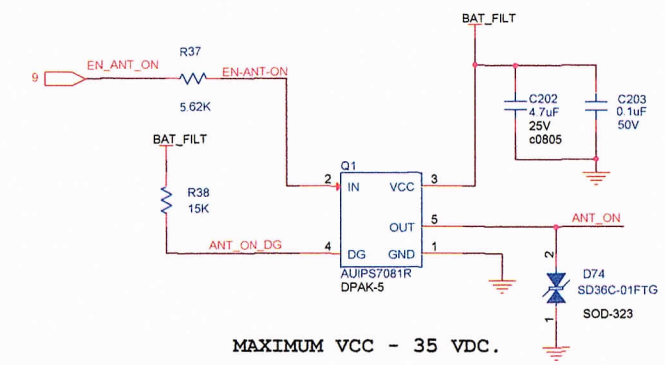


MAXIMUM VCC - 35 VDC.

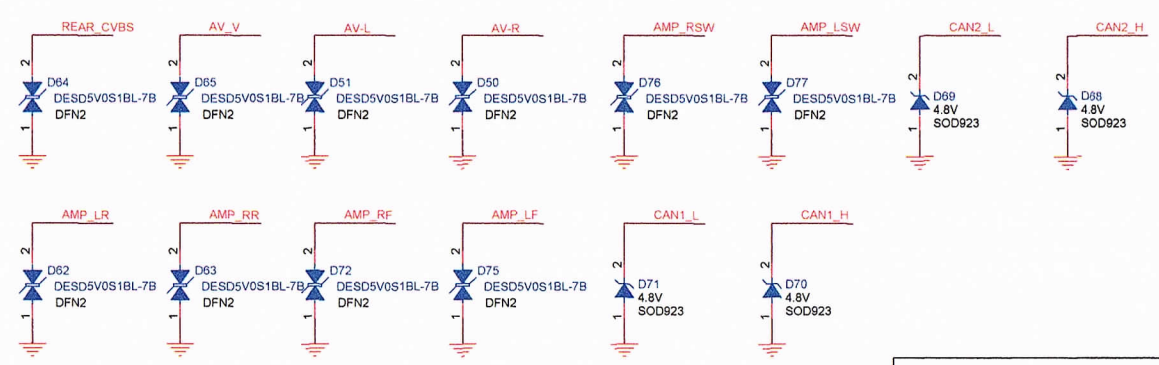


THIS DOCUMENT AND THE INFORMATION CONTAINED HEREIN ARE THE PROPERTY OF QUANTA TECNOLOGIA ELECTRONICA COPIES ARE ISSUED ON STRICT CONFIDENCE AND SHALL NOT BE REPRODUCED, COPIED OR USED AS BASIS FOR MANUFACTURE WITHOUT WRITTEN PERMISSION

5150, SCH MOTHERBOARD, QUANTA TEC QAMC
REAR CONNECTORS

| SIZE | CAGE CODE | DRAWING NO | REV |
|---|---|---|---|
| C | N/A | 5150 | 100 |
| SCALE: N/A | | SHEET 25 OF 35 | |

DWG NO. 5150 REV 100