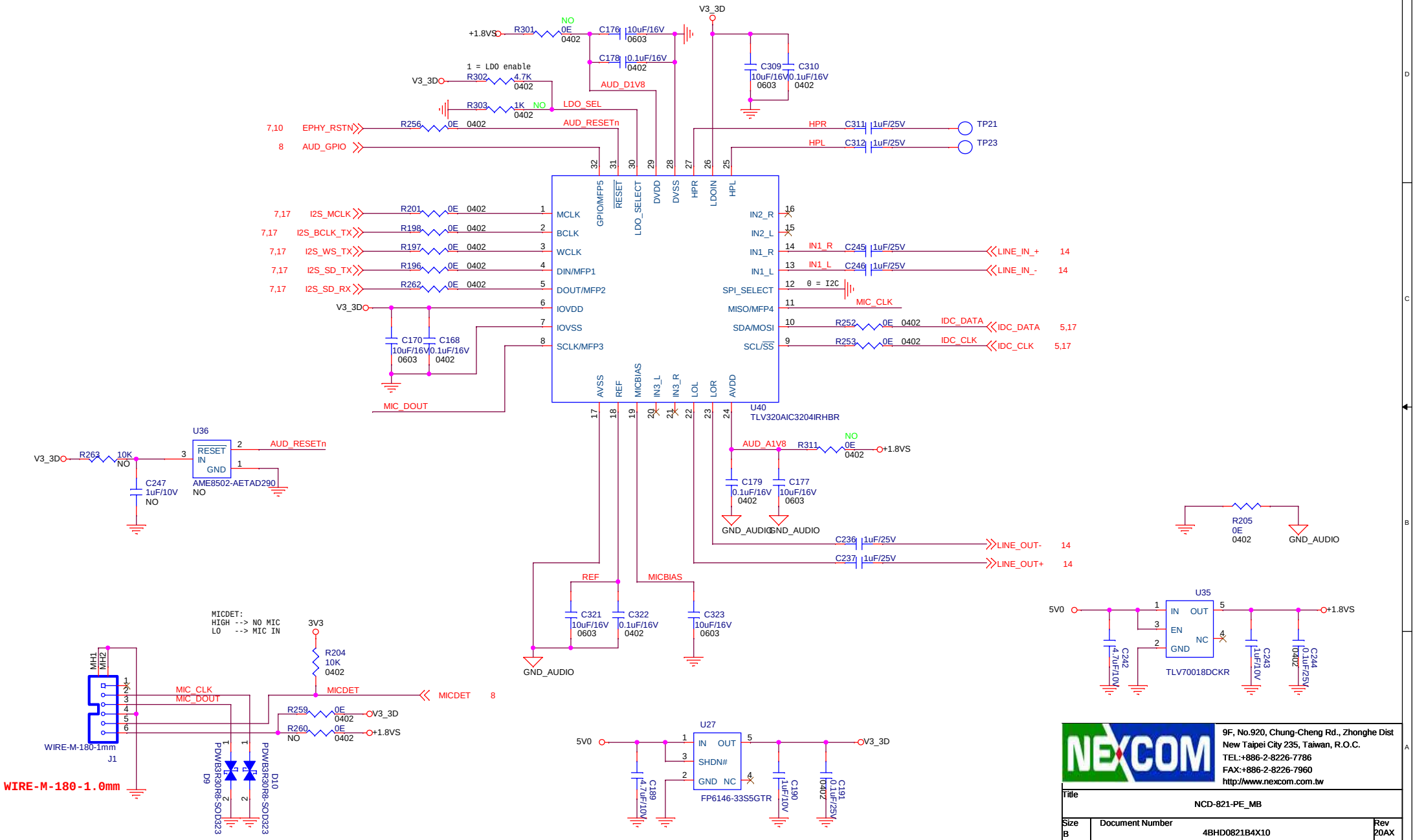
V3_3D
+1.8VS
R301 NO 0E 0402
C176 10uF/16V 0603
C178 0.1uF/16V 0402
C309 10uF/16V 0603
C310 0.1uF/16V 0402
1 = LDO enable
R302 4.7K 0402
R303 1K NO 0402
AUD_D1V8
LDO_SEL
AUD_RESETn
7,10 EPHY_RSTN
R256 0E 0402
8 AUD_GPIO
HPR C311 1uF/25V TP21
HPL C312 1uF/25V TP23
GPIO/MFP5
RESET
LDO_SELECT
DVDD
DVSS
HPR
LDOIN
HPL
7,17 I2S_MCLK R201 0E 0402 MCLK
7,17 I2S_BCLK_TX R198 0E 0402 BCLK
7,17 I2S_WS_TX R197 0E 0402 WCLK
7,17 I2S_SD_TX R196 0E 0402 DIN/MFP1
7,17 I2S_SD_RX R262 0E 0402 DOUT/MFP2
IOVDD
IOVSS
SCLK/MFP3
C170 10uF/16V 0603
C168 0.1uF/16V 0402
MIC_DOUT
IN2_R
IN2_L
IN1_R C245 1uF/25V LINE_IN_+ 14
IN1_L C246 1uF/25V LINE_IN_- 14
SPI_SELECT 0 = I2C
MISO/MFP4 MIC_CLK
SDA/MOSI R252 0E 0402 IDC_DATA IDC_DATA 5,17
SCL/SS R253 0E 0402 IDC_CLK IDC_CLK 5,17
AVSS
REF
MICBIAS
IN3_L
IN3_R
LOL
LOR
AVDD
U40
TLV320AIC3204IRHBR
U36
V3_3D R263 10K NO
RESET IN GND
AUD_RESETn
C247 1uF/10V NO
AME8502-AETAD290 NO
AUD_A1V8 R311 NO 0E 0402 +1.8VS
C179 0.1uF/16V 0402
C177 10uF/16V 0603
GND_AUDIO
C236 1uF/25V LINE_OUT- 14
C237 1uF/25V LINE_OUT+ 14
R205 0E 0402
REF
MICBIAS
C321 10uF/16V 0603
C322 0.1uF/16V 0402
C323 10uF/16V 0603
U35
5V0
IN OUT
EN
GND NC
TLV70018DCKR
C242 4.7uF/10V
C243 1uF/10V
C244 0.1uF/25V 0402
MICDET:
HIGH --> NO MIC
LO --> MIC IN
3V3
R204 10K 0402
MICDET
MIC_CLK
MIC_DOUT
R259 0E 0402 V3_3D
R260 NO 0E 0402 +1.8VS
MH1
MH2
WIRE-M-180-1mm
J1
WIRE-M-180-1.0mm
D9 PDWB3R30R8-SOD323
D10 PDWB3R30R8-SOD323
U27
5V0
IN OUT
SHDN#
GND NC
FP6146-33S5GTR
C189 4.7uF/10V
C190 1uF/10V
C191 0.1uF/25V 0402
NEXCOM
9F, No.920, Chung-Cheng Rd., Zhonghe Dist
New Taipei City 235, Taiwan, R.O.C.
TEL:+886-2-8226-7786
FAX:+886-2-8226-7960
http://www.nexcom.com.tw
Title
NCD-821-PE_MB
Size B
Document Number 4BHD0821B4X10
Rev 20AX
Date: Thursday, June 07, 2018
Sheet 16 of 19