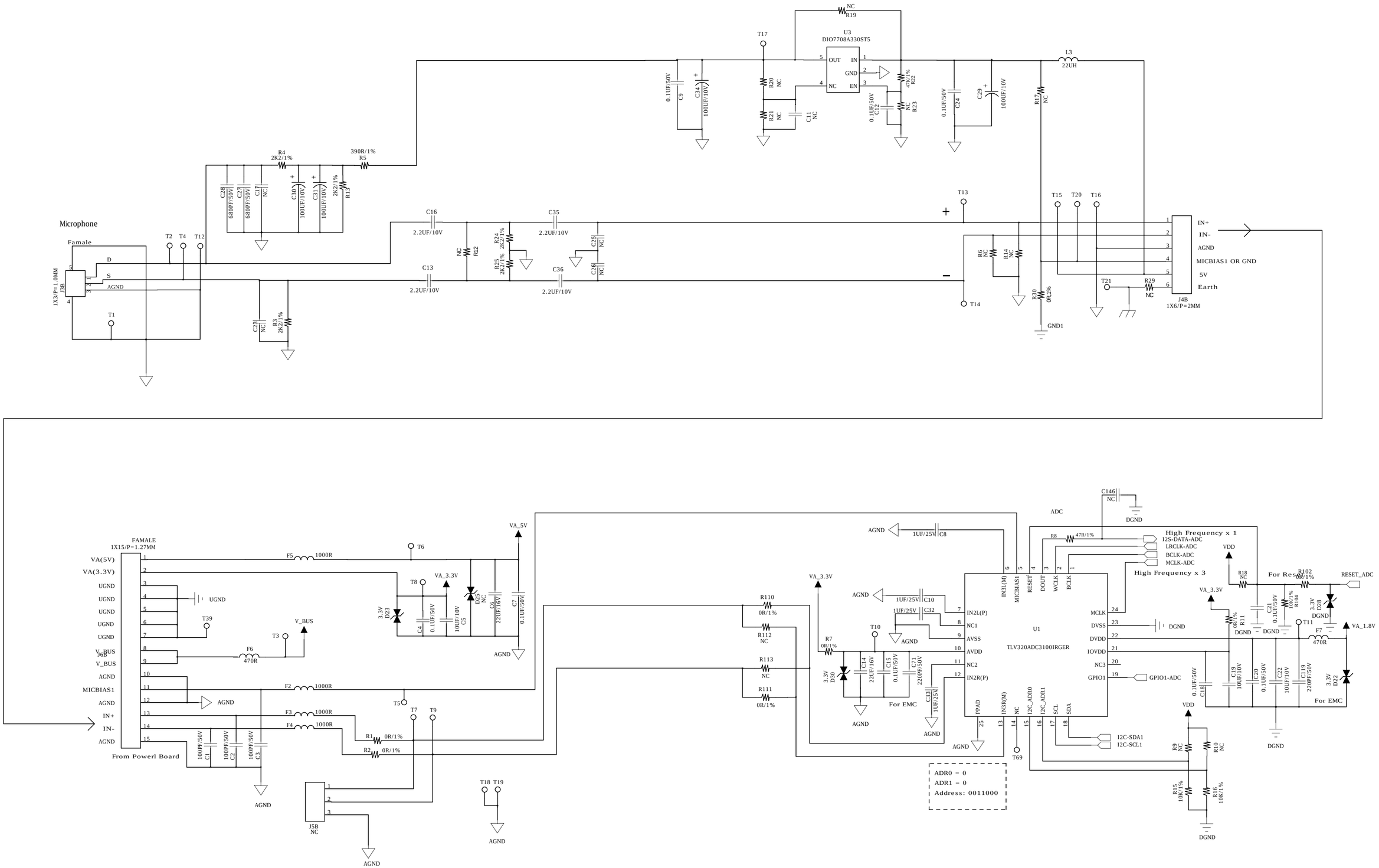
Microphone
Famale
1X3/P=1.0MM
J3B
D
S
AGND
T1
T2
T4
T12
R4
2K2/1%
390R/1%
R5
C28
680PF/50V
C27
680PF/50V
C17
NC
C30
100UF/10V
C31
100UF/10V
2K2/1%
R13
C16
2.2UF/10V
C35
2.2UF/10V
C13
2.2UF/10V
C36
2.2UF/10V
NC
R12
R24
2K2/1%
R25
2K2/1%
C25
NC
C26
NC
C23
NC
R3
2K2/1%
T17
NC
R19
U3
DIO7708A330ST5
OUT
IN
GND
NC
EN
R20
NC
R21
NC
C11
NC
0.1UF/50V
C9
C34
100UF/10V
0.1UF/50V
C12
NC
R23
47K/1%
R22
0.1UF/50V
C24
C29
100UF/10V
L3
22UH
R17
NC
T13
T14
T15
T20
T16
T21
R29
NC
R6
NC
R14
NC
R30
0R/1%
GND1
IN+
IN-
AGND
MICBIAS1 OR GND
5V
Earth
J4B
1X6/P=2MM
FAMALE
1X15/P=1.27MM
VA(5V)
VA(3.3V)
UGND
V_BUS
AGND
MICBIAS1
IN+
IN-
J6B
From Powerl Board
F5
1000R
F6
470R
F2
1000R
F3
1000R
F4
1000R
T6
T8
T39
T3
T5
T7
T9
VA_5V
VA_3.3V
3.3V
D23
C4
0.1UF/50V
10UF/10V
C5
D25
NC
C6
22UF/16V
C7
0.1UF/50V
100PF/50V
C1
100PF/50V
C2
100PF/50V
C3
R1
0R/1%
R2
0R/1%
J5B
NC
T18
T19
R110
0R/1%
R112
NC
R113
NC
R111
0R/1%
R7
0R/1%
T10
3.3V
D30
C14
22UF/16V
C15
0.1UF/50V
C71
220PF/50V
For EMC
1UF/25V
C8
1UF/25V
C10
1UF/25V
C32
C33
1UF/25V
ADC
C146
NC
DGND
R8
47R/1%
High Frequency x 1
I2S-DATA-ADC
LRCLK-ADC
BCLK-ADC
MCLK-ADC
High Frequency x 3
IN2L(P)
NC1
AVSS
AVDD
NC2
IN2R(P)
PPAD
IN3R(M)
IN3L(M)
MICBIAS1
RESET
DOUT
WCLK
BCLK
U1
TLV320ADC3100IRGER
MCLK
DVSS
DVDD
IOVDD
NC3
GPIO1
GPIO1-ADC
I2C_ADR0
I2C_ADR1
SCL
SDA
I2C-SDA1
I2C-SCL1
T69
ADR0 = 0
ADR1 = 0
Address: 0011000
VDD
R18
NC
For Reset
R102
0R/1%
RESET_ADC
R11
0R/1%
C21
0.1UF/50V
10K/1%
R104
3.3V
D28
T11
F7
470R
VA_1.8V
C18
0.1UF/50V
C19
10UF/10V
C20
0.1UF/50V
C22
10UF/10V
C119
220PF/50V
3.3V
D22
For EMC
R9
NC
R10
NC
R15
10K/1%
R16
10K/1%