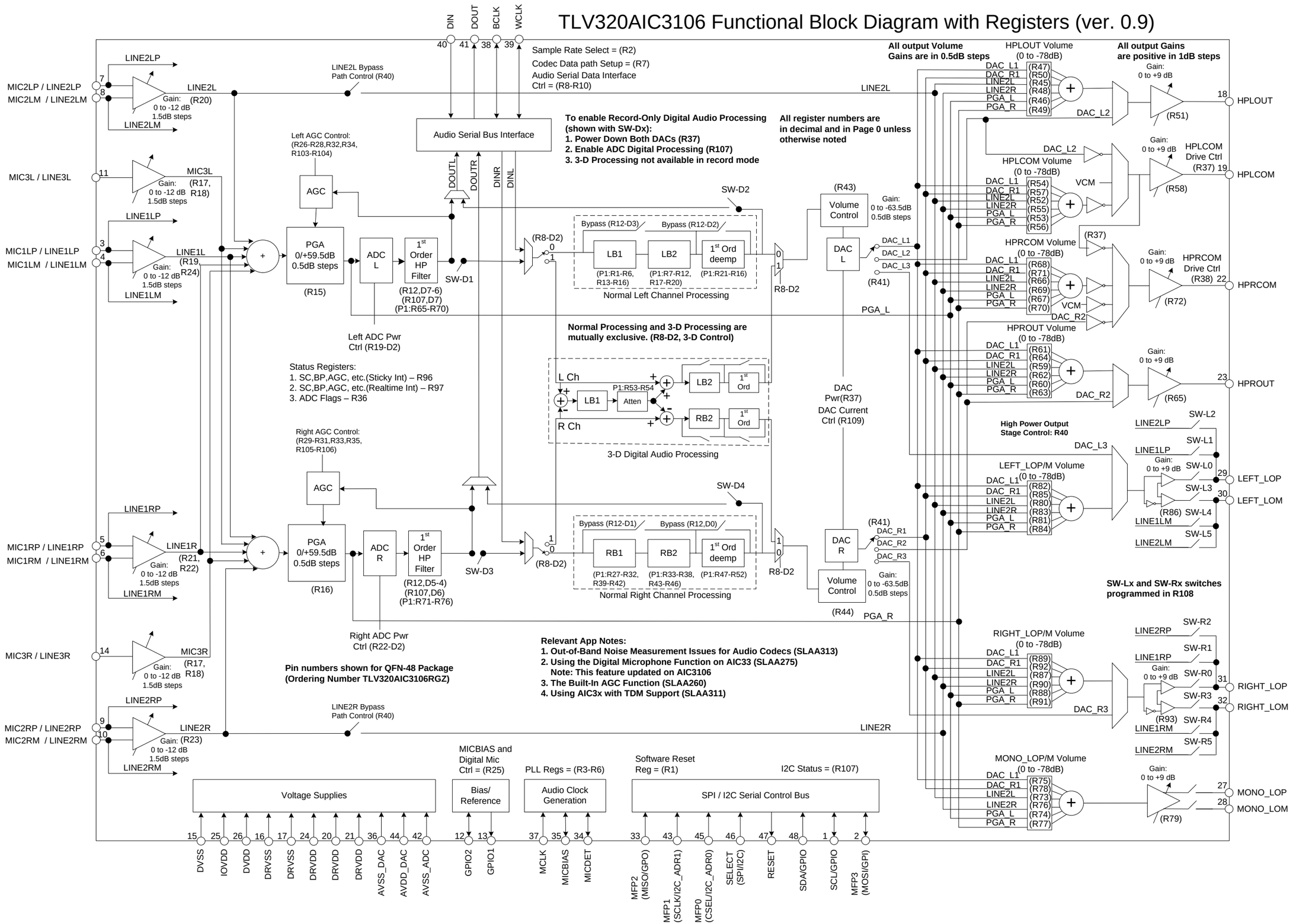TLV320AIC3106 Functional Block Diagram with Registers (ver. 0.9)