Audio Codec

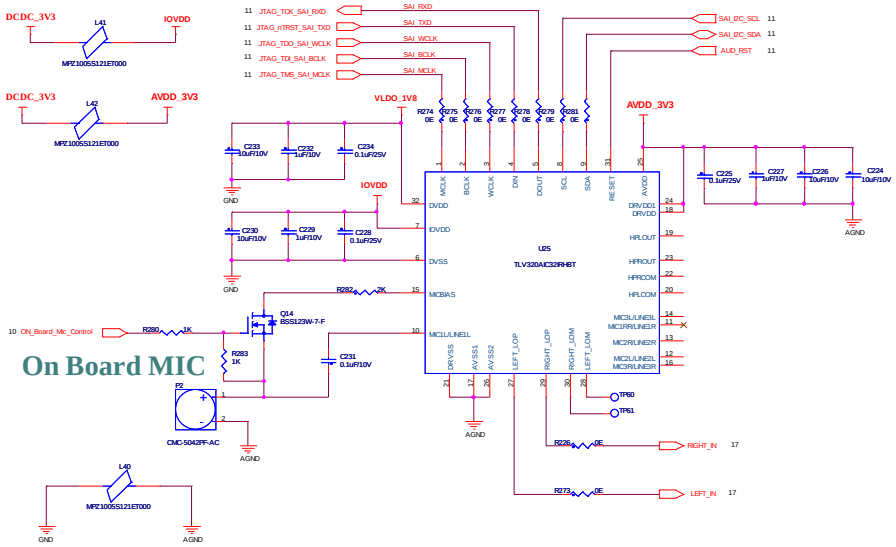

On Board MIC
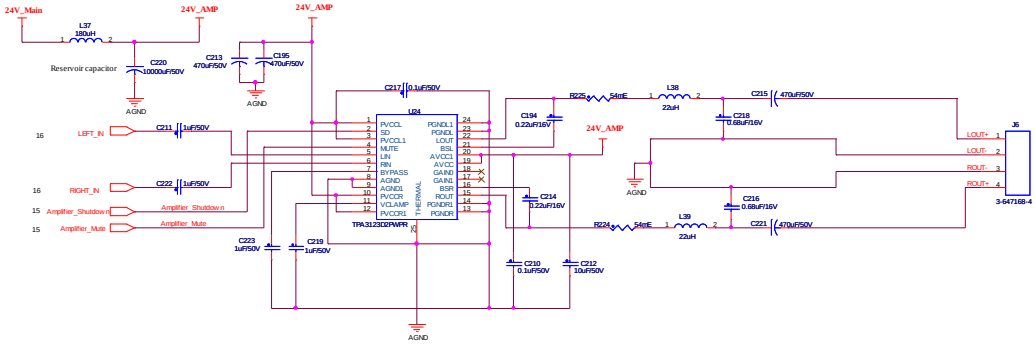
Stereo class D Amplifier